COMFORT VENTILATION

Hoval

Responsibility for energy and environment

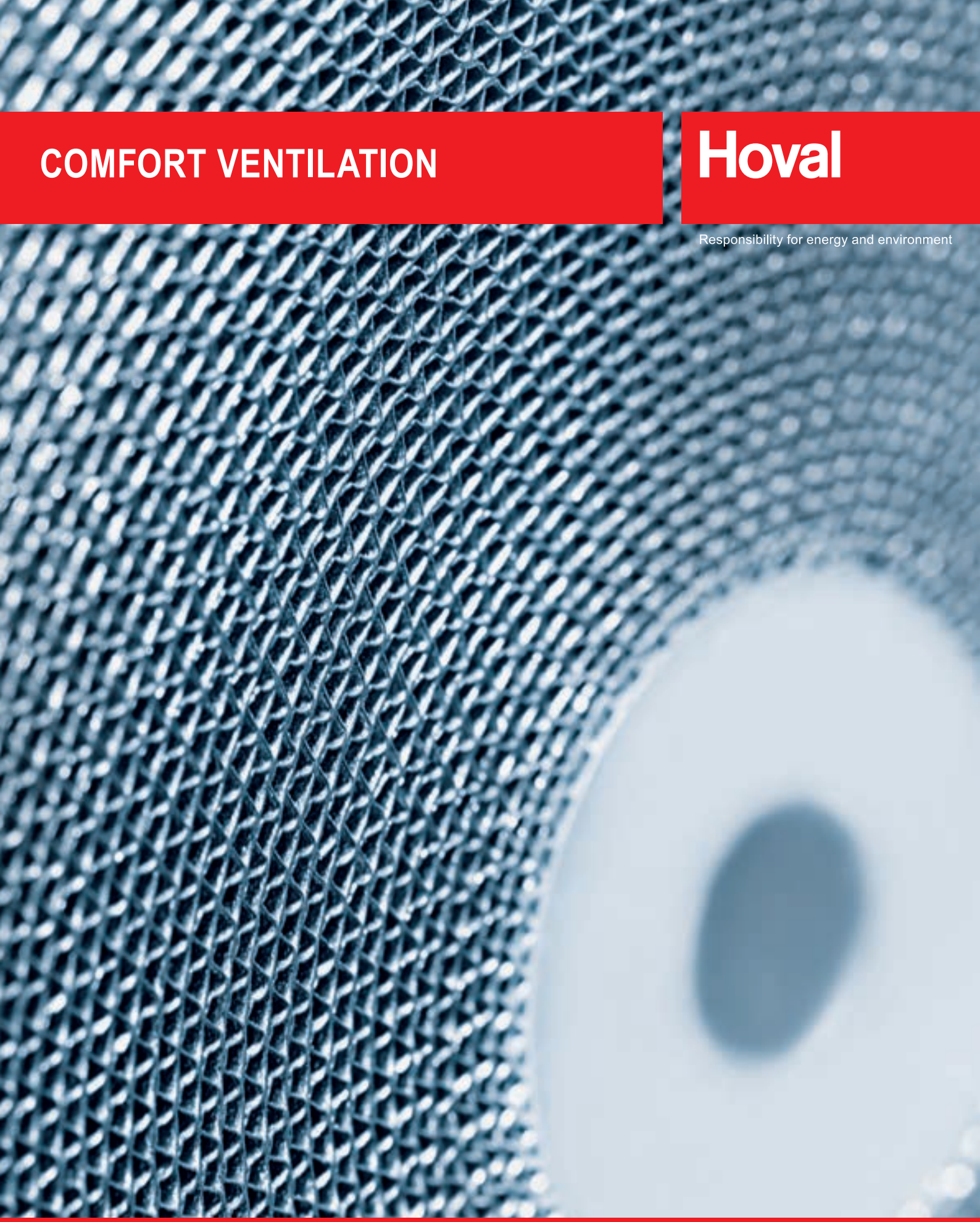

Heat and humidity recovery for a pleasant indoor climate.
Easy to use, efficient, flexible.

Page

Comfort ventilation

Page

Engineering

Hoval HomeVent® comfort FR (201, 251, 301) Comfort ventilation unit

- Comfort ventilation unit with self-regulating heat and humidity recovery for any installation position.
- For use within or outside the insulated building shell.
- High-quality, heat and sound insulated inner casing made from EPP.
- Coated outer casing made from aluzinc sheet (red).
- The casing is suitable for installation on both sides (accessible on both sides)
- Rotary enthalpy recovery unit with speed regulation
- Two backward-curved EC fans (continuously adjustable 15 %-100 %)
- High-quality Z filter
  - supply air: $ePM_{1.0}$ 50 % (F7)
  - extract air: ePM_{10} 50 % (G4)
- Integrated prefilter
- Filter monitoring (timer)
- Ready-to-connect electronics
- No need for preheating or a condensate drain

Data
- Colour: red
- Dimensions: 1000/560/374 (L/W/D, mm) Weight: 33 kg
- Electrical connection: 230 V/50 Hz, IP 40

Required accessories:
- Standard operator terminal BG02 E or
- TopTronic® E room control module comfort plus

Options
- Air quality sensor VOC or CO_2
- Active cool recovery (CoolVent® option)
- Mounting kit
- Supply air activated carbon filter
- Unit base

Delivery
- Comfort ventilation unit pre-assembled and packed.

On site
- 8-pin CAT 5 patch cable (parallel, not crossed) between comfort ventilation unit and operator terminal, provided by an electrician.
- 230 V socket

Use
The HomeVent® comfort ventilation unit provides centralised supply and extract air handling for residential spaces.
This can be a single family home or a residential unit in a multi-family house.
The comfort ventilation unit is part of the HomeVent® ventilation system for comfort ventilation, which performs the following tasks:
- Supplies residential and commercial space with outdoor air
- Extracts used air (CO_2, aerosols, excess dampness, odours, etc.)
- Saves energy through intelligent latent heat recovery
- Cleans supply air using a fine dust filter

Tests
- Hochschule Luzern in accordance with EN 13141-7
- TÜV Munich in accordance with EN 60335-1

Model range

HomeVent® comfort FR Type		Volume flow m^3/h	Heat recovery efficiency %
(201)	A+	40 - 200	90 - 130
(251)	A+	50 - 250	90 - 130
(301)	A+	60 - 300	90 - 130

Energy recovery
The built-in enthalpy recovery unit withdraws energy from the extract air and transfers it to the supply air. This enables the intelligent (temperature) and the latent (humidity) energy to be transferred. The transmission performance is regulated depending on the outdoor temperature.

The advantages of the enthalpy recovery unit are:
- Temperature efficiency up to 90 %
- Degree of humidity recovery up to 95 %
- Steplessly controlled transmission performance
- No preheating required (down to -20 °C)
- No condensation
- No bypass required

Air filtration
The outdoor air goes through two cleaning stages, reaches the highest standard. A fine-meshed grate (washable) at the entry of the unit prevents insects, leaves, etc. from reaching the unit. When the outdoor air leaves the unit, it flows through a high-capacity fine pollen filter ($ePM_{1.0}$ 50 % (F7)). The operator receives a message when it is time to change the filter. The activated carbon filter can be inserted in place of the standard supply air filter. This is a high-capacity filter (ePM_{10} 52 %) with high efficiency against particles (pollen, fine dust, etc.) and against gaseous pollutants and odours (agriculture, traffic, etc.).

Air delivery
Two backward-curved centrifugal fans with EC direct current motors deliver the air. The rotating wheel made of high-tech composite material is produced in one piece with optimised fluid mechanics, and ensures quiet operation of the unit. The electronics built into the engine enable the air volumes to be finely regulated between 15 and 100 %. The fans are arranged in such a way that no extract air can find its way to the supply air.

Suitability for winter
Due to the built-in enthalpy recovery unit, no condensate is formed in the unit. No preheating (electronic air heater) is necessary for outdoor temperatures down to -20 °C. The air volume ratio between the supply air and extract air is not changed.

Summer operation
The energy recovery is automatically reduced to a minimum at high outdoor temperatures. This enables night cooling (free cooling) in the summer as well as when the seasons change. It is not necessary to arrange for a bypass via dampers and a drive. In addition, the CoolVent® option can recover cold in air-conditioned buildings. The hot outdoor air is cooled and dried with the air-conditioned extract air.

Installation
The HomeVent® comfort ventilation unit is characterised by a compact design. It is possible to access the unit from both sides for servicing. No condensate forms in the unit, meaning that it can be installed in any position imaginable. We recommend the corresponding mounting kits with vibration dampers for the different installation positions.

Standard operator terminal BG02 E
The operator terminal consists of a plastic casing for on-wall mounting. The target air volume and the target air humidity can be set with two rotary knobs. With the party button, the air volume can be increased for a limited period of time. The connection to the HomeVent® comfort ventilation unit is made via RJ45 plug connection. The unit can also be installed in a secondary room.

TopTronic® E
room control module comfort plus
The TopTronic® E room control module comfort plus is available either with a black or white design, operated by a colour touchscreen (4.3 inch). The connection to the HomeVent® comfort ventilation unit is made via RJ45 plug connection or plug terminals (max. 0.75 mm^2). The unit can be installed on the wall with an on-wall mounted frame or with a wall-mounting plate and flush-mounted boxes. The unit can be installed in a secondary room.

Functional possibilities:
- Operation of all Hoval units connected to the bus.
- Authorisation management for operation.
- Efficient control of the ventilation system by working with day programmes
- Selection between different start screens possible during commissioning.
- Customer-specific configuration of the screen for displaying the following elements:
  - Date and time
  - Moon phases
  - Current air volume in %
  - Maximum target humidity in %
  - Active day or week programme
  - Display of the current indoor and outdoor air quality (optional VOC air quality sensors must be installed)
  - Display of the current weather or weather forecast (only possible in combination with HovalConnect)

Air quality
Optionally, one or two VOC air quality sensors can be installed in the unit during commissioning. In addition, an activated carbon filter can be installed on the supply air side as an option. The VOC air quality sensor(s) continuously monitor(s) the air for volatile organic components and regulate the air volume that is supplied or extracted via the speed of the fans. This results in optimal air quality in the building with minimal energy input.

- VOC air quality sensor on the extract air side:
  The extract air is continuously monitored for odours, tobacco smoke, cleansing agents, etc. If the concentration of the extract air exceeds a certain value, the air volume is increased correspondingly. The sensitivity can be chosen. On the TopTronic® E room control module comfort plus, the air quality is displayed by a bar, which will either be green (good air), orange (slightly contaminated air) or red (bad air).
- VOC air quality sensor on the supply and extract air side:
  The extract and supply air is continuously monitored for odours, tobacco smoke, cleansing agents, vehicle emissions, agricultural odours, etc. If the concentration of extract air exceeds a certain value, the air volume is increased correspondingly. If the concentration of supply air exceeds a certain value, the air volume is reduced correspondingly. The sensor registering the higher value takes priority. The sensitivity can be chosen. On the TopTronic® E room control module comfort plus, the air quality is displayed by a bar for the extract air and a bar for the supply air, which will either be green (good air), orange (slightly contaminated air) or red (bad air).

Cooling
The fresh air can be precooled using the CoolVent® option. However, this requires an air-conditioning system to be present in order to provide the necessary cooling in the room. The enthalpy recovery system extracts heat and humidity from the warm outdoor air and feeds it to the cold extract air. The energy consumption of the air-conditioning system is thereby reduced. The efficiency for this process is 85 %. The CoolVent® function is activated during commissioning.

Function HomeVent® comfort FR (201, 251, 301)

The outside air fan draws in outdoor air via the main line. In the first stage, this air is cleaned via a prefilter. In the enthalpy recovery system, the supply air is heated, depending on the temperature, and humidified. The extent to which heat and humidity are recovered is dependent on the temperature and humidity differences between the exhaust air and the outdoor air as well as on the rotor speed. Then the pre-treated outdoor air is cleaned by means of a pollen fine dust filter.

The exhaust air fan sucks in the used air via the coarse dust filter. The enthalpy recovery system extracts heat and humidity from the air and passes these to the supply air.
The way the fans are positioned – with overpressure on the supply air side and underpressure on the extract air side – means that no extract air can find its way to the supply air.
The electronic controls and the operator terminal feature the following additional functions:

- The speed of the enthalpy recovery system is regulated by the outdoor temperature. In this way, the heat and humidity recovery is adjusted automatically.
- The humidity regulation changes the volume flow. Thus, if the humidity indoors is too high, for instance, more dry air is introduced from the outside.
- The functions of the unit are continuously monitored. In case of a malfunction, the device is switched to “fault” mode. The malfunction is displayed on the operator terminal.

1 Prefilter
2 Outside air fan
3 Outdoor sensor
4 Enthalpy recovery unit
5 VOC outdoor air sensor
6 Supply air filter
7 Extract air filter
8 VOC extract air sensor
9 Humidity sensor
10 Electronics
11 Extract air sensor
12 Exhaust air fan
13 Operator terminal BG02 E or TopTronic® E room control module comfort plus

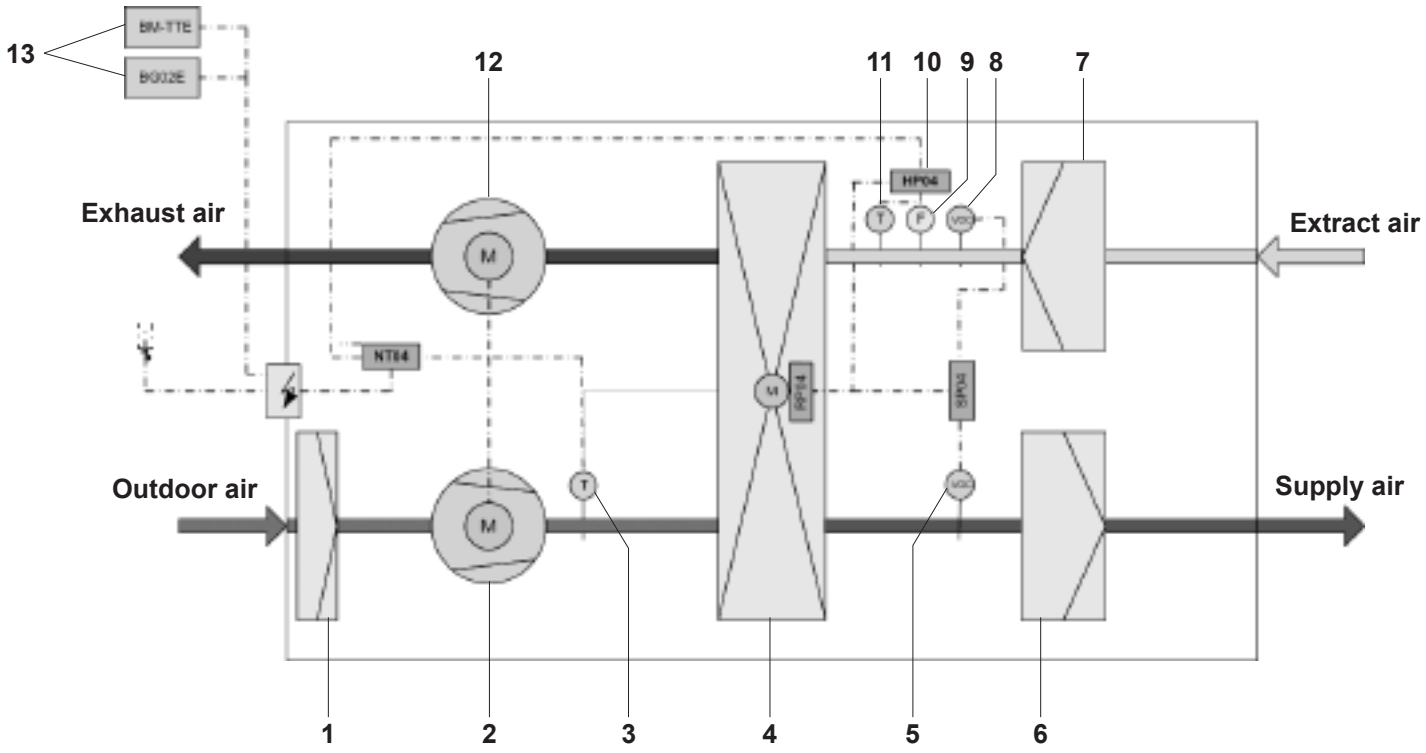

Comfort ventilation unit

HomeVent® comfort FR (201, 251, 301)

With high-efficiency heat and humidity recovery for any installation position. Including washable prefilter, mains cable and connection cable (3 m) for operator terminal.

HomeVent® comfort FR Type		Nominal volume flow m^3/h	Ext. pressure Pa	Part No.
(201)	A+	200	100	7015 392
(251)	A+	250	100	7015 803
(301)	A+	300	100	7015 830

Required accessories

Operator terminal BG02 E — 2066 444

for HomeVent® comfort FR (201, 251, 301), FRT (251, 351, 451)
Plastic housing for on-wall mounting. Knob for flow rate and room humidity
Service and fault display.
Connection to the Hoval bus system via RJ45 plug connection.

TopTronic® E room control module comfort plus

for HomeVent® comfort FR (201, 251, 301), FRT (251, 351, 451)
Operation of all Hoval air units, heating and hot water circuits connected to the bus system. Customer-specific configuration of the start screen. Displays the current air quality inside and outside the building (only possible with installed VOC sensors), displays the current weather or weather forecast (only possible in combination with HovalConnect). Connection to the Hoval bus system via RJ45 plug connection or plug terminals (max. 0.75 mm²), 4.3-inch colour touchscreen.

Consisting of:
TopTronic® E room control module comfort plus on-wall mounted frame, designer frame, wall-mounting adapter and fitting accessories

white	6037 072
black	6042 543

Technical information
see separate chapter.

Recommended accessories

	Part No.
 **Air quality sensor VOC** for HomeVent® comfort FR (201, 251, 301), FRT (251, 351, 451) Installation of 2 pieces possible (supply air and extract air). Only in connection with the TopTronic® E control module comfort plus.	2067 648
Air quality sensor CO_2 for HomeVent® comfort FR (201, 251, 301), FRT (251, 351, 451) Can be installed on flue side Only in connection with the TopTronic® E comfort plus control module **Notice:** Cannot be combined with VOC sensor	2069 954
Cool recovery unit CoolVent® for HomeVent® comfort FR (201, 251, 301), FRT (251, 351, 451) Active-controlled cool recovery for air-conditioned buildings. Activated by Hoval service technicians during commissioning.	6035 255
 **Unit base ER 200-300** for HomeVent® comfort FR (201,251,301) Red painted steel (device colour) incl. 4 vibration dampers height-adjustable feet Height: 475 - 500 mm	6052 203
Horizontal wall mounting kit for HomeVent® comfort FR (201, 251, 301) Steel bracket red coated with sound-insulating support	6042 303
Vertical wall mounting kit for HomeVent® comfort FR (201,251,301), FRT (251,351,451) Red-coated steel bracket with sound-insulating support	6046 215
Ceiling mounting kit for HomeVent® comfort FR (201, 251, 301) Steel bracket red coated with sound-insulating support	6042 305
Floor mounting kit for HomeVent® comfort FR (201, 251, 301) Steel bracket red coated with sound-insulating support	6042 306
Floor mounting kit upright for HomeVent® comfort FR (201,251,301) 4 sound insulation layers 80 x 60 x 30 mm	6044 961
 **Plywood 12x90** consisting of: galvanised steel plate 8 90° elbows 4 straight nozzles	6050 554

		Part No.
	**Acoustic insulating box insulating plate 12x90** for HomeVent® comfort FR (201, 251) Casing made from alu-zinc sheet with connection nozzles 2 x DN 150 which can be fastened on plywood Sound insulation element inside supply air and extract air side, access panel 6 insertable throttle orifices Dimensions: LxWxH: 402 x 560 x 380 mm	6050 533
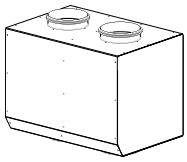	**Acoustic insulating box SDB-150-400** for HomeVent® comfort FR (201,251,301) Casing made from aluzinc sheet with Connection 4 x DN 150 Sound absorption block inside supply air and extract air side Dimensions: L x W x H: 400 x 560 x 374 mm	6042 014
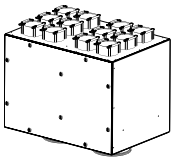	**Distribution box VTB-150 12x75** Suitable for HomeVent® comfort FR (201) Casing made from aluzinc sheet with Connection 2 x DN 150 Connection 12 x DN 75 Sound absorption block inside supply air and extract air side, access panel Insertable throttle orifices per connection Dimensions: L x W x H: 400 x 560 x 374 mm	6042 043
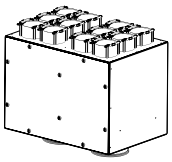	**Distribution box VTB-150 12 x 90** for HomeVent® comfort FR (201,251) Casing made from aluzinc sheet with Connection 2 x DN 150 Connection 12 x DN 90 Sound absorption block inside supply air and extract air side, access panel Insertable throttle orifices per connection Dimensions: L x W x H: 400 x 560 x 374 mm	6042 015
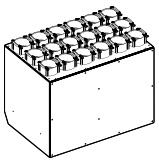	**Distribution box VTB-150 18x75 3R** Suitable for HomeVent® comfort FR (251, 301) and acoustic insulating box SDB-150-400 Casing made from alu-zinc sheet with main connection nozzles 2x DN 150 Coupling 18x DN 75 Sound insulation element inside supply air and extract air side, access panel Dimensions: LxWxH 480x560x381 mm **Notice:** Use only in conjunction with additional silencers	6045 220

Additional accessories see separate chapter Components.

Filter HomeVent® comfort FR (201, 251, 301)

		Part No.
	**Supply air filter for FR (201, 251, 301)** for HomeVent® comfort FR (201, 251, 301) Large fine dust pollen filter Z construction, filter class $ePM_{1.0}$ 50 % (F7)	5038 283
	**Supply air active carbon filter for FR (201, 251, 301)** for HomeVent® comfort FR (201, 251, 301) Large fine dust active carbon filter against particles (pollen, fine dust, etc.) and against gaseous pollutants and odours Z construction, filter class ePM_{10} 52 %	5039 587
	**Extract air filter for FR (201,251,301)** for HomeVent® comfort FR (201,251,301) Large coarse dust filter Z construction, filter class ePM_{10} 50 % (G4)	5038 284

HomeVent® comfort FR ventilation unit (201, 251, 301)

Type		(201)	(251)	(301)
Max. volume flow (at 100 Pa external pressure*)	m³/h	200	250	300
Air flow rate control range	m³/h	40-200	50-250	60-300
Humidity setpoint setting	%		30 … 65	
Electrical connection				
• Voltage (AC)	V		230	
• Frequency	Hz		50	
• Max. current consumption	A	0.76	1.04	1.23
• cos ρ (mean value)		0.44	0.44	0.48
Type of protection			IP 40	
Power consumption (at 70 % of the max. volume flow, 50 Pa external pressure)	W	38	50	60
Degree of heat processing (as per DIN 4719)	%		90-130	
Temperature ratio (at 70 % of the max. volume flow)	%	84	84	85
Humidity ratio (at 70 % of the max. volume flow)	%	91	90	90
Specific fan power SFP (at 70 % of the max. volume flow)	W/m³/h	0.26	0.27	0.28
Filter class (as per ISO-16890)				
• Supply air filter			$ePM_{1.0}$ 50 %	
• Extract air filter			ePM_{10} 50 %	
Sound power level			see table on following page	
Leakage (as per EN 13141-7)				
• Internal	%		< 1	
• External	%	1.64	1.31	1.09
Net weight	kg		33	
Application limits for device setup, weather-protected (EN 60721-3-3), 3K5 as per EN 50090-2-2				
• Ambient temperature	°C		-20...45	
• Ambient humidity	g/kg		Max. 15	
• Dew point temp. in installation room	°C		< 15	
Air conditions (moderate outdoor climate EN 60721-2-1)				
• Outside air intake temperature	°C		-20...40	
• Outside air intake humidity	% r.H.		5…95	
• Extract air temperature	°C		5…35	
• Extract air humidity	% r.H.		5...80	
• Max. extract air humidity	g/kg		12	

Sound power levels for HomeVent® comfort FR (201)

Casing

Volume flow	External pressure	L_W [dB]								Sound pressure level L_{WA}
SUP/EXT [m³/h]	[Pa]	63	125	250	500	1k	2k	4k	8k	63 Hz ... 8 kHz [dB(A)]
140	50	40	39	46	38	31	28	21	25	41
200	100	50	44	54	48	39	35	28	26	49

Fresh air

Volume flow	External pressure	L_W [dB]								Sound pressure level L_{WA}
[m³/h]	[Pa]	63	125	250	500	1k	2k	4k	8k	63 Hz ... 8 kHz [dB(A)]
140	50	48	48	55	50	45	46	34	33	52
200	100	54	52	60	55	50	52	43	44	58

Supply air

Volume flow	External pressure	L_W [dB]								Sound pressure level L_{WA}
[m³/h]	[Pa]	63	125	250	500	1k	2k	4k	8k	63 Hz ... 8 kHz [dB(A)]
140	50	38	42	51	41	31	25	19	24	44
200	100	46	47	56	48	38	32	26	25	51

Extract air

Volume flow	External pressure	L_W [dB]								Sound pressure level L_{WA}
[m³/h]	[Pa]	63	125	250	500	1k	2k	4k	8k	63 Hz ... 8 kHz [dB(A)]
140	50	40	45	54	40	29	22	18	24	46
200	100	50	49	61	50	35	30	21	25	54

Exhaust air

Volume flow	External pressure	L_W [dB]								Sound pressure level L_{WA}
[m³/h]	[Pa]	63	125	250	500	1k	2k	4k	8k	63 Hz ... 8 kHz [dB(A)]
140	50	48	48	58	51	44	42	36	30	52
200	100	53	52	66	60	51	51	46	41	62

Sound power: HomeVent® comfort FR (201) + acoustic insulating box SDB-150-400

Supply air

Volume flow	External pressure	L_W [dB]								Sound pressure level L_{WA}
[m³/h]	[Pa]	63	125	250	500	1k	2k	4k	8k	63 Hz ... 8 kHz [dB(A)]
140	50	34	36	42	19	11	10	17	24	33
200	100	39	41	44	26	15	11	17	25	35

Extract air

Volume flow	External pressure	L_W [dB]								Sound pressure level L_{WA}
[m³/h]	[Pa]	63	125	250	500	1k	2k	4k	8k	63 Hz ... 8 kHz [dB(A)]
140	50	35	37	44	18	8	4	17	24	35
200	100	40	41	45	30	11	10	17	24	39

Sound power: HomeVent® comfort FR (201) + distribution box VTB-150 12 x 75
Sound power: HomeVent® comfort FR (201) + distribution box VTB-150 12 x 90

Supply air

Volume flow	External pressure	L_W [dB]								Sound pressure level L_{WA}
[m³/h]	[Pa]	63	125	250	500	1k	2k	4k	8k	63 Hz ... 8 kHz [dB(A)]
140	50	31	29	31	24	6	9	17	24	27
200	100	35	32	39	32	16	10	17	24	34

Extract air

Volume flow	External pressure	L_W [dB]								Sound pressure level L_{WA}
[m³/h]	[Pa]	63	125	250	500	1k	2k	4k	8k	63 Hz ... 8 kHz [dB(A)]
140	50	29	31	35	19	6	9	17	24	29
200	100	33	36	41	29	7	9	17	24	35

For external pressure loss, the sound insulation box is not taken into account.

Sound power levels for HomeVent® comfort FR (251)

Casing

Volume flow	External pressure	L_W [dB]								Sound pressure level L_{WA}
SUP/EXT [m³/h]	[Pa]	63	125	250	500	1k	2k	4k	8k	63 Hz ... 8 kHz [dB(A)]
175	50	39	40	49	40	33	30	21	25	44
250	100	58	46	50	55	42	37	29	27	52

Fresh air

Volume flow	External pressure	L_W [dB]								Sound pressure level L_{WA}
[m³/h]	[Pa]	63	125	250	500	1k	2k	4k	8k	63 Hz ... 8 kHz [dB(A)]
175	50	49	49	57	52	46	48	38	37	54
250	100	56	53	60	61	53	54	47	48	61

Supply air

Volume flow	External pressure	L_W [dB]								Sound pressure level L_{WA}
[m³/h]	[Pa]	63	125	250	500	1k	2k	4k	8k	63 Hz ... 8 kHz [dB(A)]
175	50	41	43	53	44	34	28	22	25	46
250	100	56	48	55	52	42	35	29	26	51

Extract air

Volume flow	External pressure	L_W [dB]								Sound pressure level L_{WA}
[m³/h]	[Pa]	63	125	250	500	1k	2k	4k	8k	63 Hz ... 8 kHz [dB(A)]
175	50	42	47	57	42	31	25	19	24	49
250	100	67	51	57	56	40	32	24	25	53

Exhaust air

Volume flow	External pressure	L_W [dB]								Sound pressure level L_{WA}
[m³/h]	[Pa]	63	125	250	500	1k	2k	4k	8k	63 Hz ... 8 kHz [dB(A)]
175	50	50	49	58	53	47	46	41	35	55
250	100	64	54	60	66	55	54	51	46	64

Sound power: HomeVent® comfort FR (251) + acoustic insulating box SDB-150-400

Supply air

Volume flow	External pressure	L_W [dB]								Sound pressure level L_{WA}
[m³/h]	[Pa]	63	125	250	500	1k	2k	4k	8k	63 Hz ... 8 kHz [dB(A)]
175	50	36	37	42	20	12	10	17	24	33
250	100	44	42	44	30	18	13	18	25	36

Extract air

Volume flow	External pressure	L_W [dB]								Sound pressure level L_{WA}
[m³/h]	[Pa]	63	125	250	500	1k	2k	4k	8k	63 Hz ... 8 kHz [dB(A)]
175	50	37	38	44	21	9	9	17	24	36
250	100	49	43	44	37	14	11	17	24	38

Sound power: HomeVent® comfort FR (251) + distribution box VTB-150 12 x 90

Supply air

Volume flow	External pressure	L_W [dB]								Sound pressure level L_{WA}
[m³/h]	[Pa]	63	125	250	500	1k	2k	4k	8k	63 Hz ... 8 kHz [dB(A)]
175	50	34	30	31	27	11	9	17	24	29
250	100	54	34	35	36	25	18	17	17	35

Extract air

Volume flow	External pressure	L_W [dB]								Sound pressure level L_{WA}
[m³/h]	[Pa]	63	125	250	500	1k	2k	4k	8k	63 Hz ... 8 kHz [dB(A)]
175	50	39	41	39	29	21	14	17	24	34
250	100	43	37	36	34	9	9	17	24	33

For external pressure loss, the sound insulation box is not taken into account.

Sound power levels for HomeVent® comfort FR (301)

Casing

Volume flow	External pressure	L_W [dB]								Sound pressure level L_{WA}
SUP/EXT [m³/h]	[Pa]	63	125	250	500	1k	2k	4k	8k	63 Hz ... 8 kHz [dB(A)]
210	50	50	44	54	48	34	35	28	26	49
300	100	50	47	50	54	44	39	32	29	51

Fresh air

Volume flow	External pressure	L_W [dB]								Sound pressure level L_{WA}
[m³/h]	[Pa]	63	125	250	500	1k	2k	4k	8k	63 Hz ... 8 kHz [dB(A)]
210	50	54	52	60	55	50	52	43	44	58
300	100	55	54	61	62	55	56	50	51	63

Supply air

Volume flow	External pressure	L_W [dB]								Sound pressure level L_{WA}
[m³/h]	[Pa]	63	125	250	500	1k	2k	4k	8k	63 Hz ... 8 kHz [dB(A)]
210	50	46	47	56	48	38	32	26	25	51
300	100	48	50	56	57	44	37	32	27	54

Extract air

Volume flow	External pressure	L_W [dB]								Sound pressure level L_{WA}
[m³/h]	[Pa]	63	125	250	500	1k	2k	4k	8k	63 Hz ... 8 kHz [dB(A)]
210	50	50	49	61	50	35	30	21	25	55
300	100	50	53	57	63	43	35	27	26	59

Exhaust air

Volume flow	External pressure	L_W [dB]								Sound pressure level L_{WA}
[m³/h]	[Pa]	63	125	250	500	1k	2k	4k	8k	63 Hz ... 8 kHz [dB(A)]
210	50	53	52	66	59	51	51	46	41	62
300	100	58	56	61	71	57	56	54	50	68

Sound power: HomeVent® FR comfort FR (301) + acoustic insulating box SDB-150-400

Supply air

Volume flow	External pressure	L_W [dB]								Sound pressure level L_{WA}
[m³/h]	[Pa]	63	125	250	500	1k	2k	4k	8k	63 Hz ... 8 kHz [dB(A)]
210	50	40	41	44	26	15	11	17	24	36
300	100	46	45	46	33	20	15	20	27	40

Extract air

Volume flow	External pressure	L_W [dB]								Sound pressure level L_{WA}
[m³/h]	[Pa]	63	125	250	500	1k	2k	4k	8k	63 Hz ... 8 kHz [dB(A)]
210	50	40	41	45	30	11	10	17	24	39
300	100	50	44	46	40	16	13	20	27	41

For external pressure loss, the sound insulation box is not taken into account.

Performance chart for air flow rate, HomeVent® comfort FR (201, 251, 301)

p_{ext} Sum of external pressure drops incl. acoustic insulating box for each air stream at the planned air flow rate.

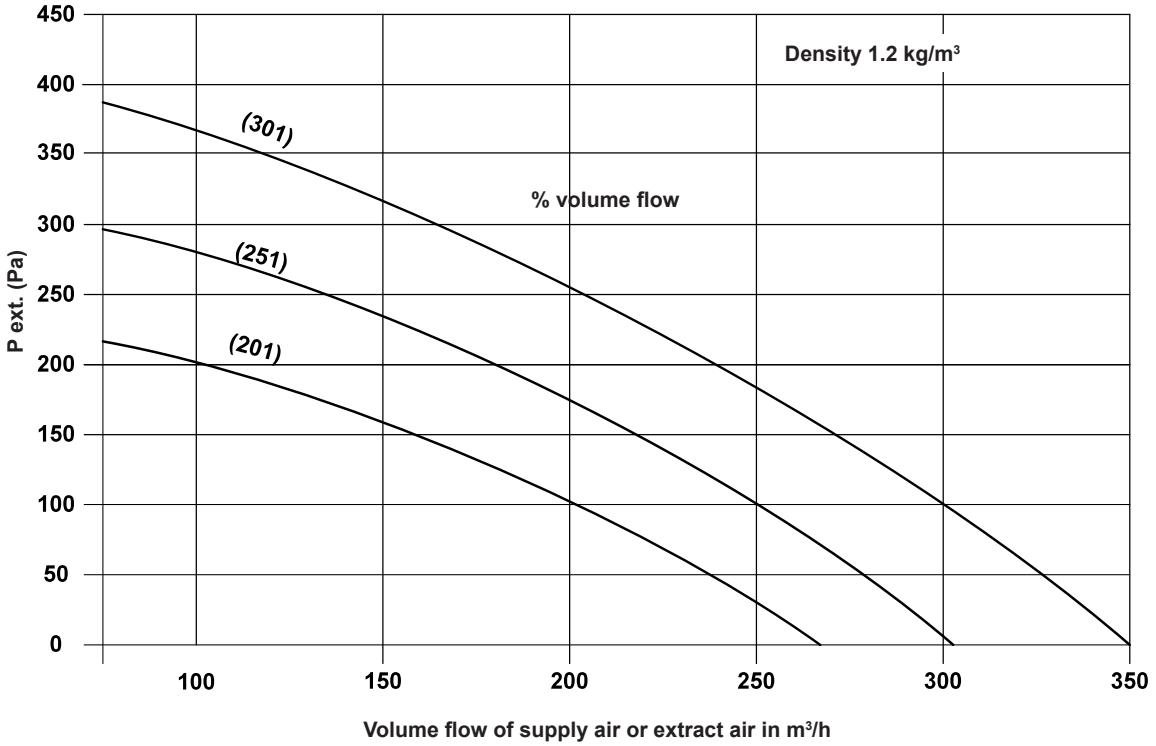

Electrical power consumption HomeVent® comfort FR (201-301)

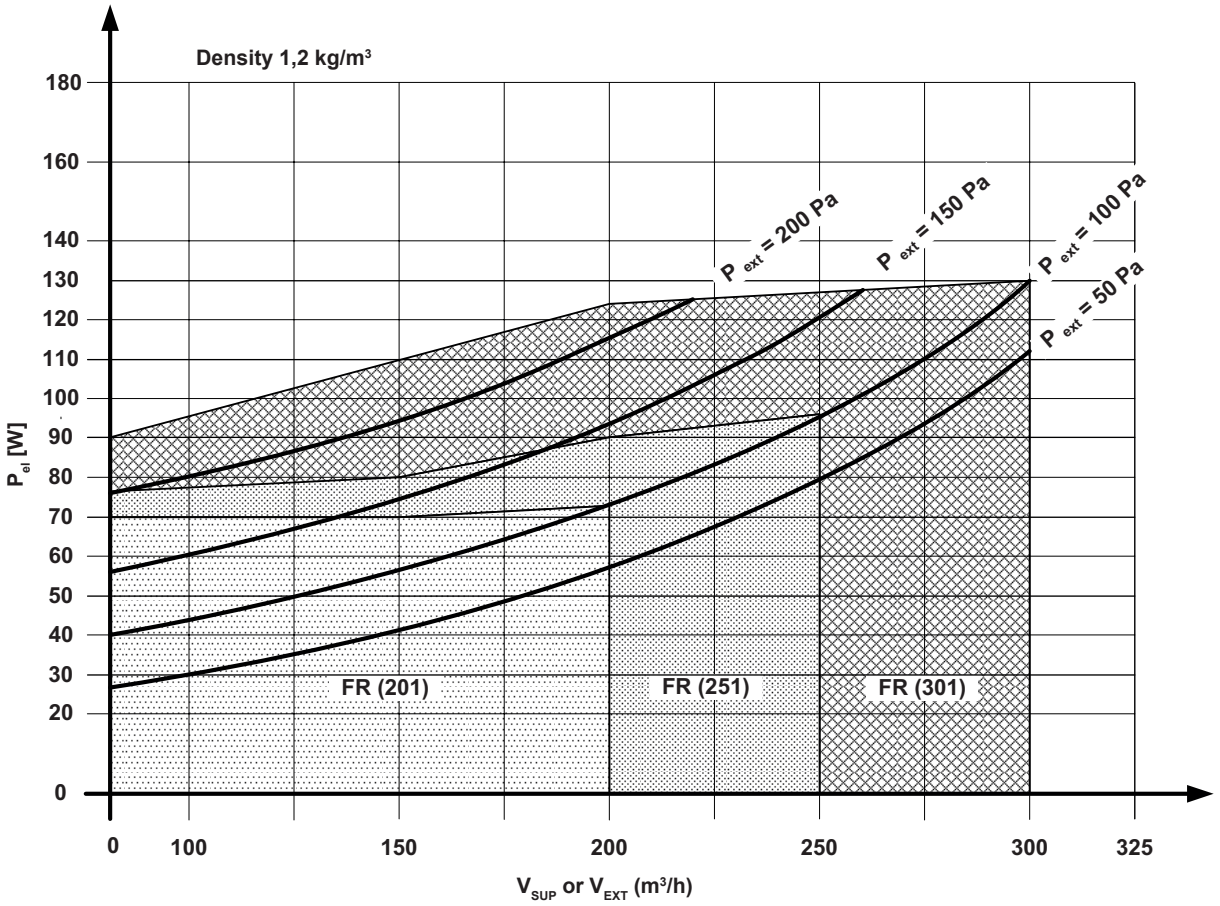

HomeVent® comfort ventilation unit

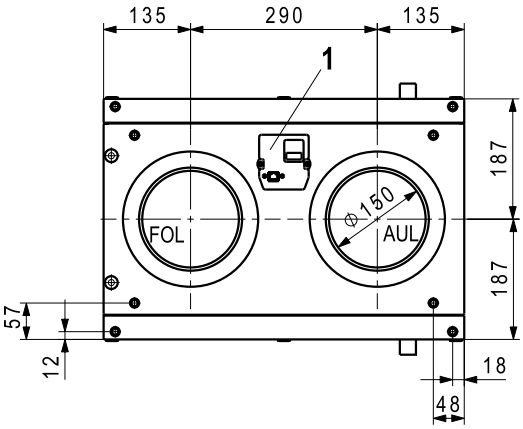

ZUL = supply air
ABL = extract air
FOL = exhaust air
AUL = fresh air

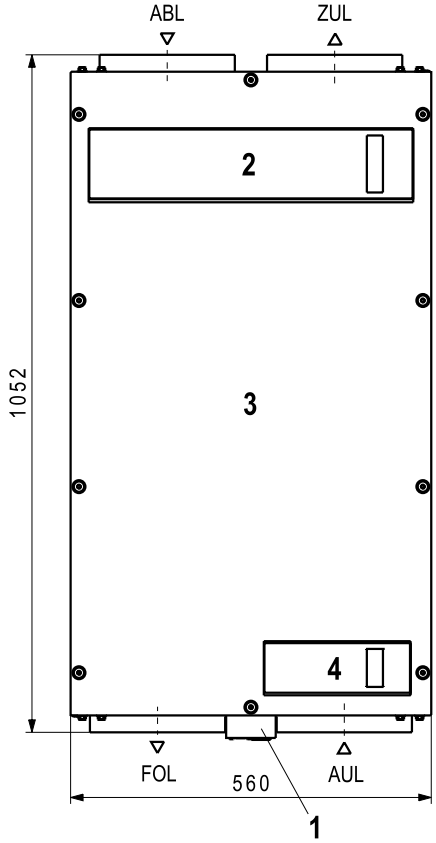

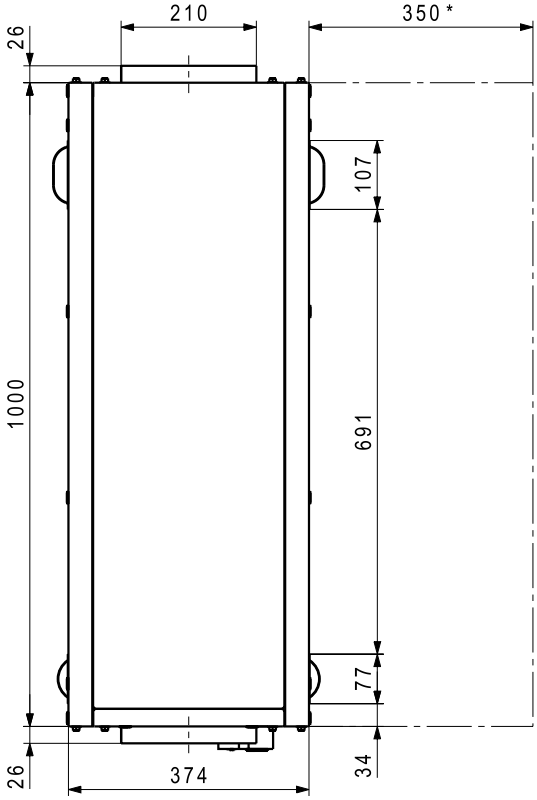

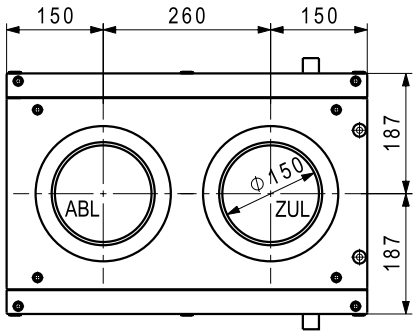

1 Electrical connection with microfuse
Space is required for changing the microfuse.
2 Filter cover for supply air filter/extract air filter
3 Access panel
4 Maintenance cover for prefilter

Maintenance and revision is possible at the front and the back – flexible installation

* Space requirements for filter change and service tasks

HomeVent® comfort ventilation unit with acoustic insulating box

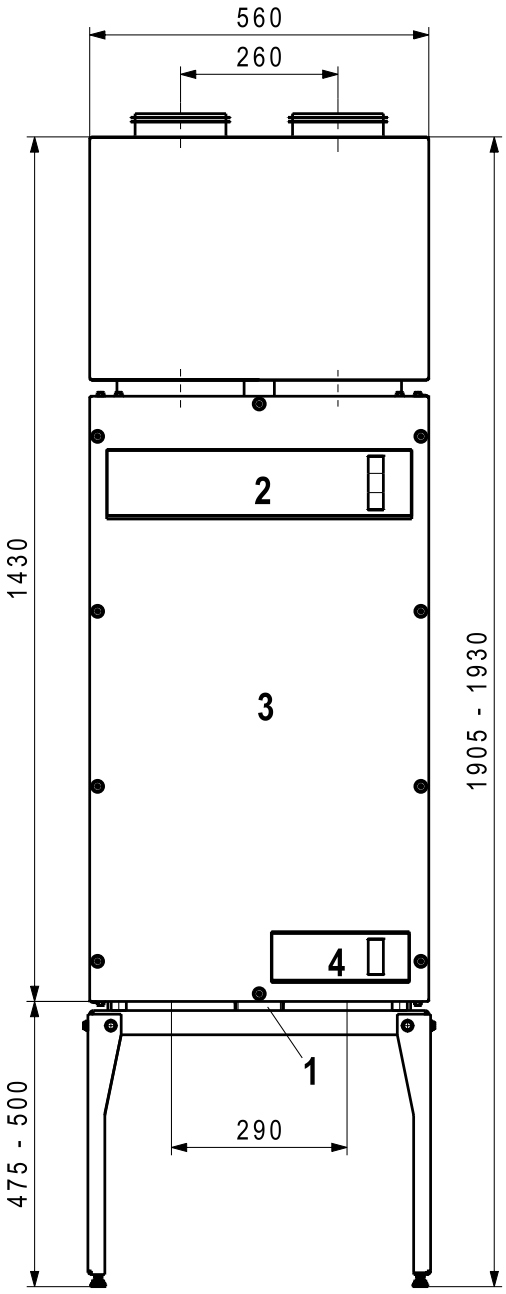

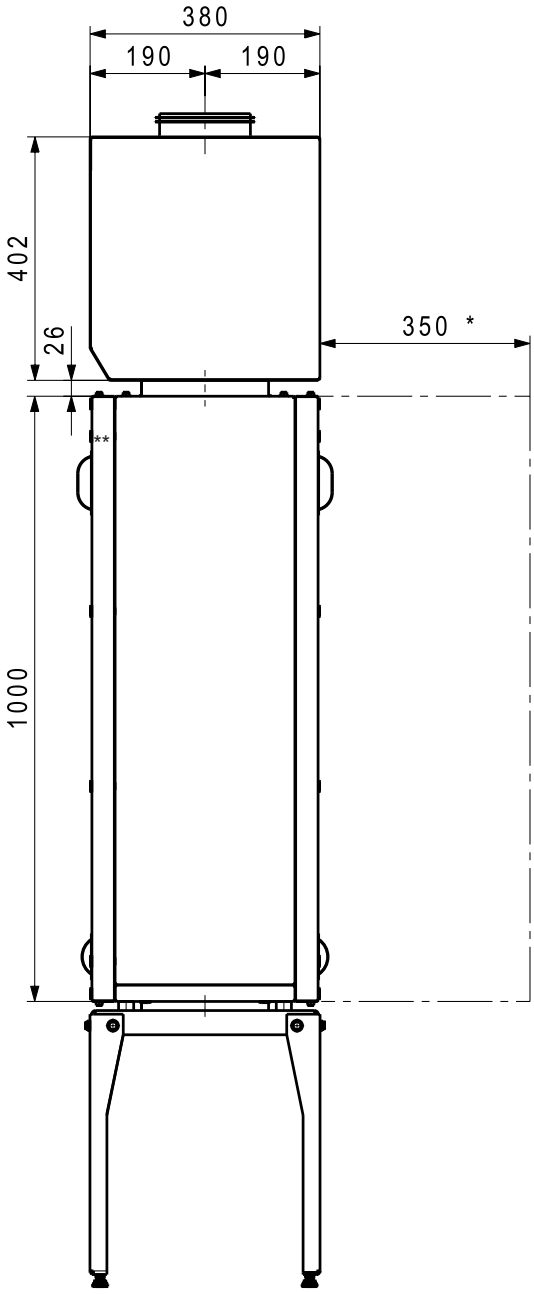

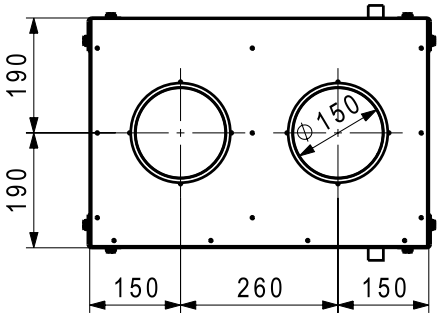

1 Electrical connection
Space is required for changing the microfuse.
2 Filter cover for supply air filter/extract air filter
3 Access panel
4 Maintenance cover for prefilter

Maintenance and revision is possible at the front and the back – flexible installation

* Space requirements for filter change and service tasks

HomeVent® comfort ventilation unit

Installation with vibration dampers

Vertical wall installation: S-WV

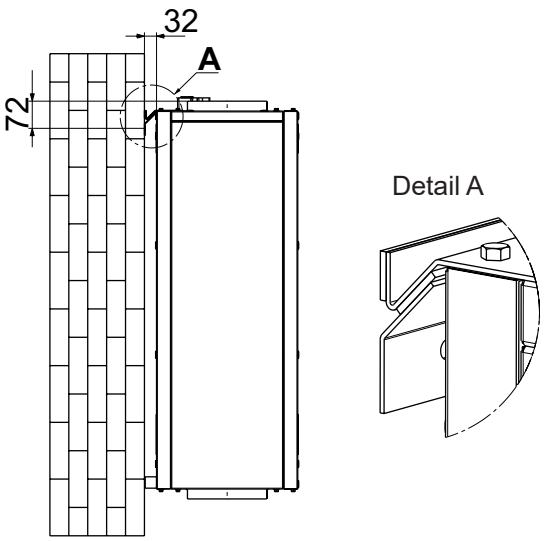

Horizontal wall installation: S-WH

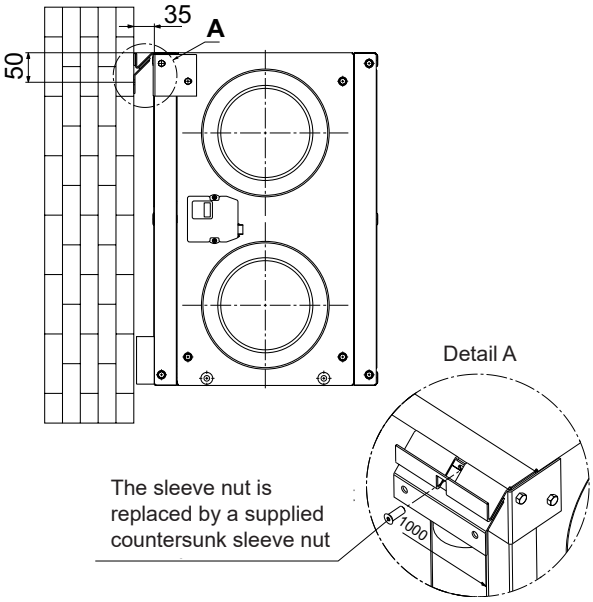

Ceiling installation: S-D

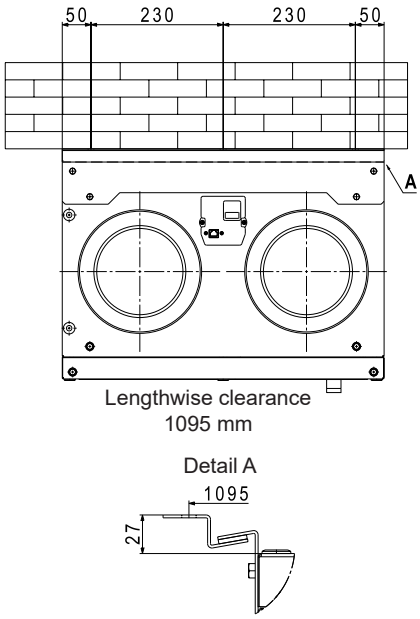

Floor installation: S-B

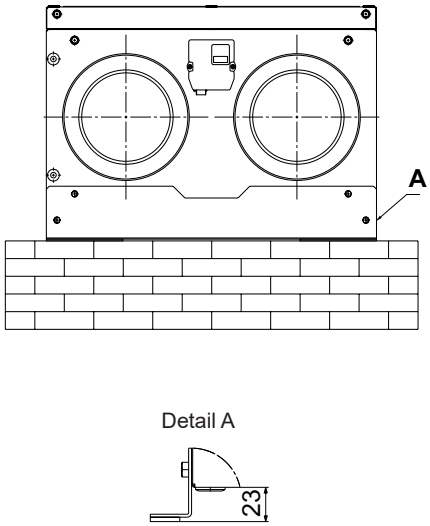

Floor installation: upright

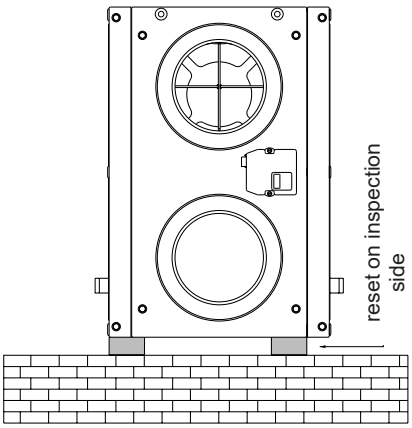

Can be installed in any position.

Acoustic insulating box SDB-150-400
Casing made from aluzinc sheet with 4 x DN 150 connection nozzles.
Internal sound insulation element on supply air side and extract air side - not on fresh air side and exhaust air side

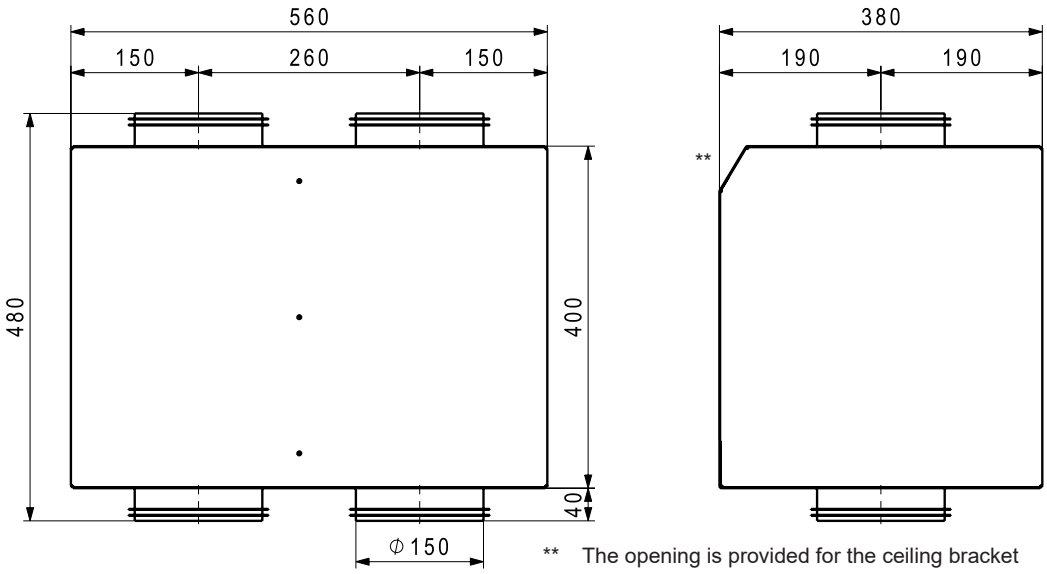

** The opening is provided for the ceiling bracket

Distribution cases DN 150

Distribution box VTB-150 12 x 75 or 90
Casing made from aluzinc sheet with access panel. Internal sound absorbing units on supply air side and extract air side.
Connection nozzles:
2 x DN 150 (downwards)
SUP 6 x 75, EXT 6 x 75
SUP 6 x 90, EXT 6 x 90
Consisting of: distribution box, 6 end covers, baffles for adjusting the air flow for each flexible pipe DN 75 or DN 90 (included in the scope of delivery).

Distribution box VTB-150 12 x 75

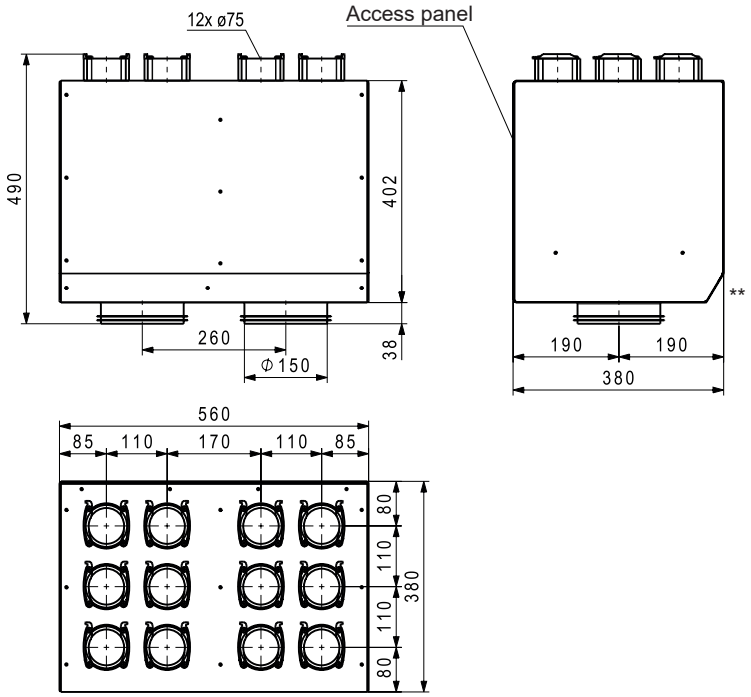

** The opening is provided for the ceiling bracket

Distribution box VTB-150 12 x 90

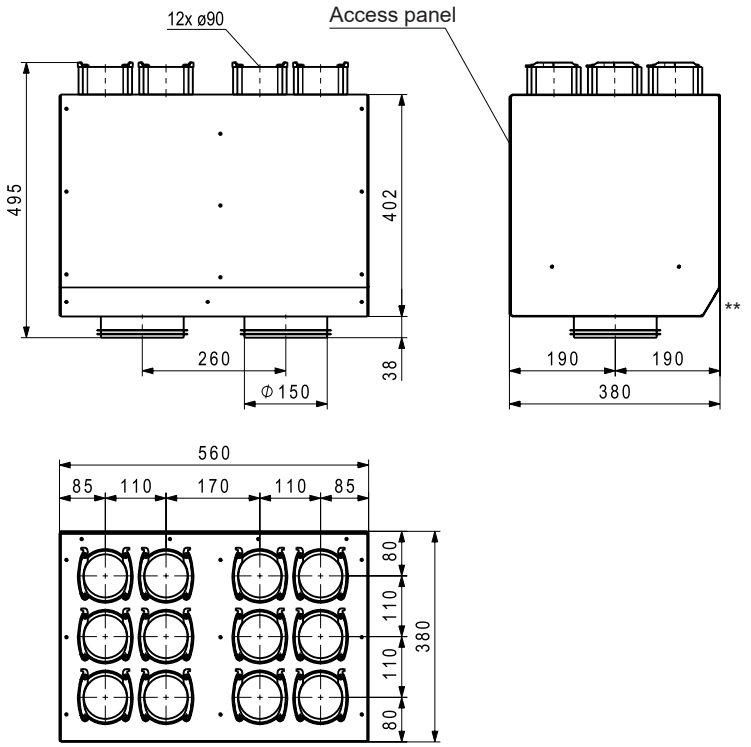

** The opening is provided for the ceiling bracket

Distribution cases DN 150

Distribution box VTB-150 18x75 3R
Casing made from aluzinc sheet with main connection nozzles and access panel
Sound insulation element inside supply air and extract air side
2x DN 150
Connection nozzles 18x DN 75
Additional silencer recommended

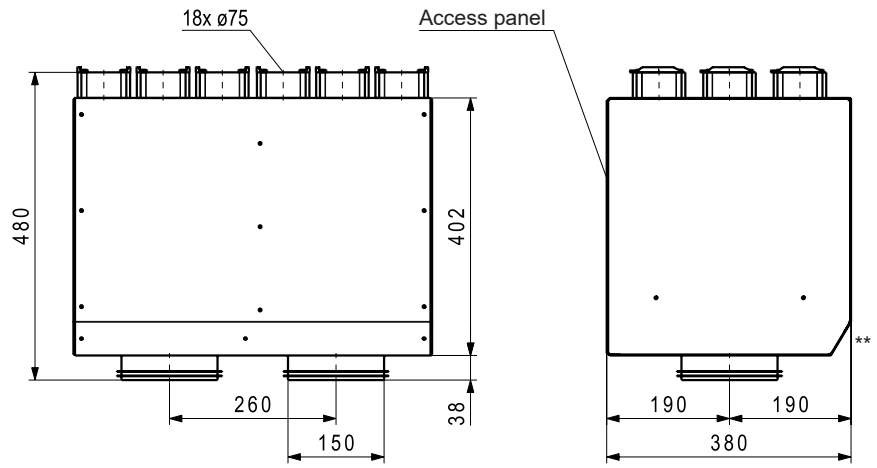

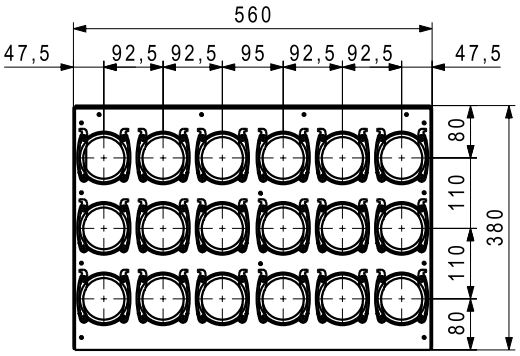

** The opening is provided for the ceiling bracket

Hoval HomeVent® comfort FRT (251, 351, 451) Comfort ventilation unit

- Comfort ventilation unit with self-adjusting heat and humidity recovery.
- For use within or outside the insulated building shell.
- High-quality, heat and sound insulated inner casing made from EPP.
- Coated outer casing made from aluzinc sheet (red).
- Unit can be installed using the mounting fixture (mounting kit) or in combination with the base.
- Rotary enthalpy recovery unit with speed regulation
- Two backward-curved EC fans (continuously adjustable 15 % - 100 %)
- High-quality Z filter
  - supply air: $ePM_{1.0}$ 50 % (F7)
  - extract air: ePM_{10} 50 % (G4)
- Integrated prefilter
- Filter monitoring (timer)
- Ready-to-connect electronics
- No need for preheating or a condensate drain

Data
- Colour: red
- Dimensions: 925/560/560 (L/W/D, mm) Weight: 39 kg
- Electrical connection: 230 V/50 Hz, IP 40

Required accessories:
- Standard operator terminal BG02 E or
- TopTronic® E room control module comfort plus

Options
- Air quality sensor VOC or CO_2
- Active cool recovery (Option CoolVent®)
- Mounting kit, Base
- Supply air activated carbon filter

Delivery
- Comfort ventilation unit pre-assembled and packed.

On site
- 8-pin CAT 5 patch cable (parallel, not crossed) between comfort ventilation unit and operator terminal
- RJ45 socket
- 230 V socket

Use
The HomeVent® comfort ventilation unit provides centralised supply and extract air handling for residential spaces.
This can be a single family home or a residential unit in a multi-family house.
Office rooms, conference rooms and cloakrooms are also ideal applications.
The comfort ventilation unit is part of the HomeVent® ventilation system for comfort ventilation, which performs the following tasks:
- Supplies residential and commercial space with outdoor air
- Extracts used air (CO_2, aerosols, excess dampness, odours, etc.)
- Saves energy through intelligent latent heat recovery
- Cleans supply air using a fine dust filter

Tests
- TÜV Munich in accordance with DIN EN 13141-7
- TÜV Munich in accordance with DIBt
- TÜV Munich in accordance with EN 60335-1

Model range

HomeVent® comfort FRT Type		Volume flow m^3/h	Heat recovery efficiency %
(251)	A+	50 - 250	90 - 130
(351)	A+	60 - 350	90 - 130
(451)	A	70 - 450	90 - 130

Energy recovery
The built-in enthalpy recovery unit withdraws energy from the extract air and transfers it to the supply air. This enables the intelligent (temperature) and the latent (humidity) energy to be transferred. The transmission performance is regulated between 0 and 100 % depending on the outdoor temperature.

The advantages of the enthalpy recovery unit are:
- Temperature efficiency up to 90 %
- Degree of humidity recovery up to 95 %
- Transmission performance can be adjusted continuously
- No preheating required (down to -20 °C)
- No condensation
- No bypass required

Air filtration
The outdoor air goes through two cleaning stages, ensuring the highest standard. A fine-meshed grate (washable) at the entry of the unit prevents insects, leaves, etc. from reaching the unit. When the outdoor air leaves the unit, it flows through a high-capacity fine pollen filter ($ePM_{1.0}$ 50 % (F7)). The operator receives a message when it is time to change the filter. In addition, an activated carbon filter can be installed on the supply air side as an option. The activated carbon filter can be inserted in place of the standard supply air filter. This is a high-capacity filter (ePM_{10} 52 %) with high efficiency against particles (pollen, fine dust, etc.) and against gaseous pollutants and odours (agriculture, traffic, etc.).

Air delivery
Two backward-curved centrifugal fans with EC direct current motors deliver the air.
The rotating wheel made of high-tech composite material is produced in one piece with optimised fluid mechanics, and ensures quiet operation of the unit. The electronics built into the engine enable the air volumes to be finely regulated between 15 and 100 %. The fans are arranged in such a way that no extract air can find its way to the supply air.

Suitability for winter
Due to the built-in enthalpy recovery unit, no condensate is formed in the unit. No preheating (electronic air heater) is necessary for outdoor temperatures down to -20°C.
The air volume ratio between the supply air and extract air is not changed.

Summer operation
The energy recovery is automatically reduced to a minimum at high outdoor temperatures. This enables night cooling (free cooling) in the summer as well as when the seasons change. It is not necessary to arrange for a bypass via dampers and a drive. In addition, the CoolVent® option can recover cold in air-conditioned buildings. The hot outdoor air is cooled and dried with the air-conditioned extract air.

Installation
The HomeVent® comfort ventilation unit is characterised by a compact design. It is possible to access the unit from the front for servicing. No condensate forms in the unit. We recommend the corresponding mounting kits with vibration dampers.

Standard operator terminal BG02 E
The operator terminal consists of a plastic casing for on-wall mounting. The target air volume and the target air humidity can be set with two rotary knobs. With the party button, the air volume can be increased for a limited period of time. The connection to the HomeVent® comfort ventilation unit is made via RJ45 plug connection. The unit can also be installed in a secondary room.

TopTronic® E
room control module comfort plus
The TopTronic® E room control module comfort plus is available either with a black or white design. Operated by a colour touchscreen (4.3 inch). The connection to the HomeVent® comfort ventilation unit is made via RJ45 plug connection or plug terminals (max. 0.75 mm^2). The unit can be installed on the wall with an on-wall mounted frame or with a wall-mounting plate and flush-mounted boxes. The unit can be installed in a secondary room.

Functional possibilities:
- Operation of all Hoval units connected to the bus.
- Authorisation management for operation.
- Efficient control of the ventilation system by working with day programmes
- Selection between different start screens possible during commissioning.
- Customer-specific configuration of the screen for displaying the following elements:
  - Date and time
  - Moon phases
  - Current air volume in %
  - Maximum target humidity in %
  - Active day or week programme
  - Display of the current indoor and outdoor air quality (optional VOC air quality sensors must be installed)
  - Display of the current weather or weather forecast (only possible in combination with HovalConnect)

Air quality
Optionally, one or two VOC air quality sensors can be installed in the unit during commissioning. The VOC air quality sensor(s) continuously monitor(s) the air for volatile organic components and regulate the air volume that is supplied or extracted via the speed of the fans. This results in optimal air quality in the building with minimal energy input.

- VOC air quality sensor on the extract air side:
  The extract air is continuously monitored for odours, tobacco smoke, cleansing agents, etc. If the concentration of the extract air exceeds a certain value, the air volume is increased correspondingly. The sensitivity can be chosen. On the TopTronic® E room control module comfort plus, the air quality is displayed by a bar, which will either be green (good air), orange (slightly contaminated air) or red (bad air).
- VOC air quality sensor on the supply and extract air side:
  The extract and supply air is continuously monitored for odours, tobacco smoke, cleansing agents, vehicle emissions, agricultural odours, etc. If the concentration of extract air exceeds a certain value, the air volume is increased correspondingly. If the concentration of supply air exceeds a certain value, the air volume is reduced correspondingly. The sensor registering the higher value takes priority. The sensitivity can be chosen. On the TopTronic® E room control module comfort plus, the air quality is displayed by a bar for the extract air and a bar for the supply air, which will either be green (good air), orange (slightly contaminated air) or red (bad air).
- The activated carbon filter can be inserted in place of the standard supply air filter. This is a high-capacity filter (F7) with high efficiency against particles (pollen, fine dust, etc.) and against gaseous pollutants and odours (agriculture, traffic, etc.).

Cooling
The fresh air can be precooled using the CoolVent® option. However, this requires an air-conditioning system to be present in order to provide the necessary cooling in the room. The enthalpy recovery system extracts heat and humidity from the warm outdoor air and feeds it to the cold extract air. The energy consumption of the air-conditioning system is thereby reduced. The efficiency for this process is 85 %. The CoolVent® function is activated during commissioning.

Function HomeVent® comfort FRT (251, 351, 451)

The outside air fan draws in outdoor air via the main line. In the first stage, this air is cleaned via a prefilter. In the enthalpy recovery system, the supply air is heated, depending on the temperature, and humidified. The extent to which heat and humidity are recovered is dependent on the temperature and humidity differences between the exhaust air and the outdoor air as well as on the rotor speed. Then the pre-treated outdoor air is cleaned by means of a pollen fine dust filter.

The exhaust air fan sucks in the used air via the coarse dust filter. The enthalpy recovery system extracts heat and humidity from the air and passes these to the supply air.
The way the fans are positioned – with overpressure on the supply air side and underpressure on the extract air side – means that no extract air can find its way to the supply air.
The electronic controls and the operator terminal feature the following additional functions:

- The speed of the enthalpy recovery system is regulated by the outdoor temperature. In this way, the heat and humidity recovery is adjusted automatically.
- The humidity regulation changes the volume flow. Thus, if the humidity indoors is too high, for instance, more dry air is introduced from the outside.
- The functions of the unit are continuously monitored. In case of a malfunction, the device is switched to “fault” mode. The malfunction is displayed on the operator terminal.

1 Prefilter
2 Outside air fan
3 Outdoor sensor
4 Enthalpy recovery unit
5 VOC outdoor air sensor
6 Supply air filter
7 Extract air filter
8 VOC extract air sensor
9 Humidity sensor
10 Electronics
11 Extract air sensor
12 Exhaust air fan
13 Operator terminal BG02 E or TopTronic® E room control module comfort plus

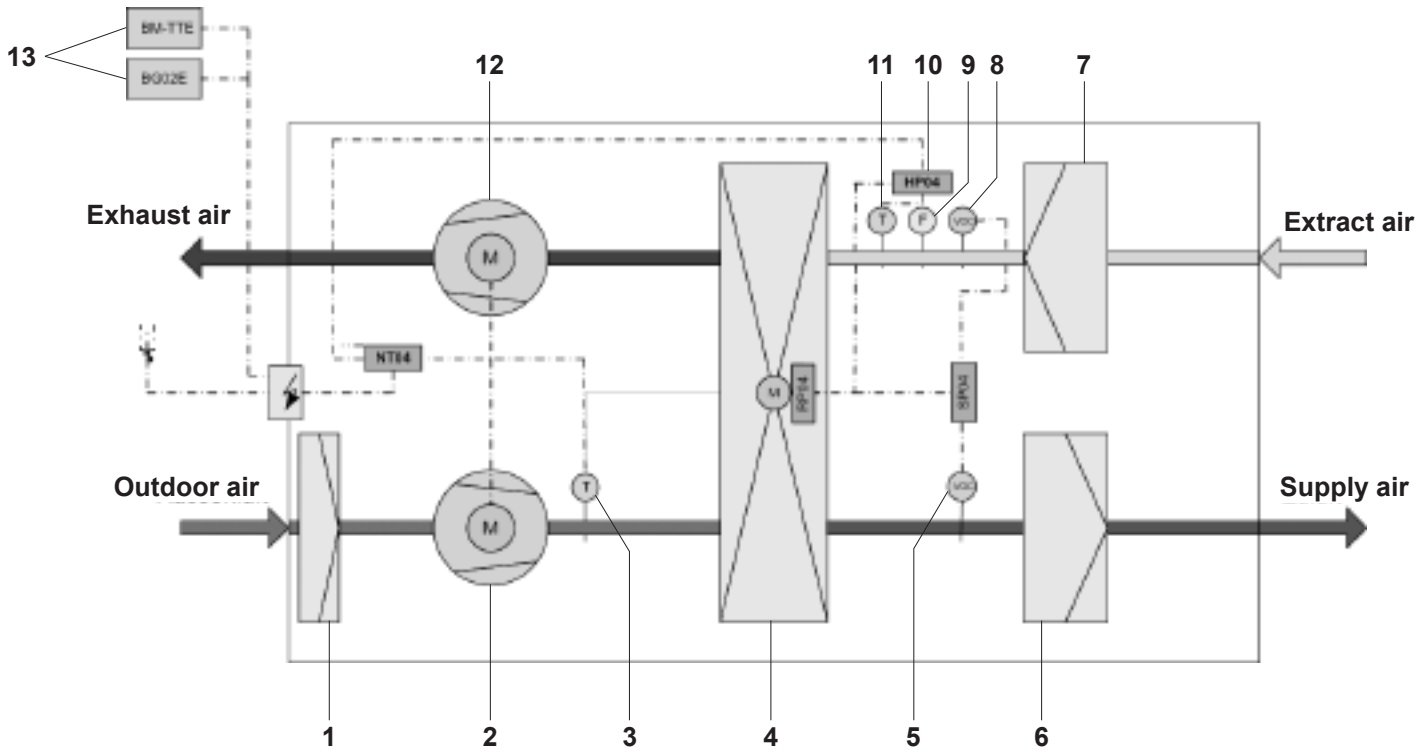

Comfort ventilation units

HomeVent® comfort FRT (251, 351, 451)

With high-efficiency heat and humidity recovery. Including washable prefilter, mains cable and connection cable (3 m) for operator terminal.

HomeVent® comfort FRT Type		Nominal volume flow m³/h	Ext. pressure Pa	Part No.
(251)	A+	250	100	7016 713
(351)	A+	350	100	7016 714
(451)	A	450	100	7016 715

In order to operate a Hoval HomeVent® comfort ventilation unit, it is **essential** to have an operator terminal or a TopTronic® E room control module comfort plus.

Required accessories

Operator terminal BG02 E — 2066 444

for HomeVent® comfort FR (201, 251, 301), FRT (251, 351, 451)
Plastic housing for on-wall mounting. Knob for flow rate and room humidity
Service and fault display.
Connection to the Hoval bus system via RJ45 plug connection.

TopTronic® E room control module comfort plus

for HomeVent® comfort FR (201, 251, 351), FRT (251, 351, 451)
Operation of all Hoval air units, heating and hot water circuits connected to the bus system. Customer-specific configuration of the start screen. Displays the current air quality inside and outside the building (only possible with installed VOC sensors), displays the current weather or weather forecast (only possible in combination with HovalConnect). Connection to the Hoval bus system via RJ45 plug connection or plug terminals (max. 0.75 mm²), 4.3-inch colour touchscreen.

Consisting of:
TopTronic® E room control module comfort plus on-wall mounted frame, designer frame, wall-mounting adapter and fitting accessories

white	6037 072
black	6042 543

Technical information
see separate chapter.

Recommended accessories

	Part No.
 **Air quality sensor VOC** for HomeVent® comfort FR (201, 251, 301), FRT (251, 351, 451) Installation of 2 pieces possible (supply air and extract air). Only in connection with the TopTronic® E control module comfort plus.	2067 648
Air quality sensor CO_2 for HomeVent® comfort FR (201, 251, 301), FRT (251, 351, 451) Can be installed on flue side Only in connection with the TopTronic® E comfort plus control module **Notice:** Cannot be combined with VOC sensor	2069 954
Cool recovery unit CoolVent® for HomeVent® comfort FR (201, 251, 301), FRT (251, 351, 451) Active-controlled cool recovery for air-conditioned buildings. Activated by Hoval service technicians during commissioning.	6035 255
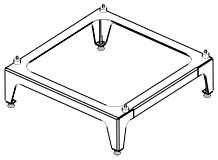 **Unit base GS (251-451)** for HomeVent® comfort FRT (251,351,451) Red painted steel, 4 vibration dampers, height-adjustable feet. Height: 185 - 205 mm	6046 216
Vertical wall mounting kit for HomeVent® comfort FR (201,251,301), FRT (251,351,451) Red-coated steel bracket with sound-insulating support	6046 215
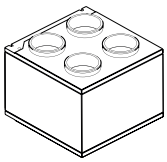 **Acoustic insulating box FRT extract-supply air front** for HomeVent® comfort FRT (251,351,451) Housing made of aluzinc sheet with connection nozzles 4 x DN 160. Extract air front left, supply air front right Exhaust air back left, fresh air back right Internal acoustic insulating unit All 4 air ducts are sound-insulated. Dimensions: LxWxH 400 x 560 x 560 mm	6046 018
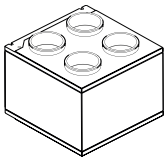 **Acoustic insulating box** FRT extract air-supply air right for HomeVent® comfort FRT (251,351,451) Housing made of aluzinc sheet with connection nozzles 4 x DN 160. Extract air front right, supply air rear right Exhaust air front left, fresh air rear left Internal acoustic insulating unit All 4 air ducts are sound-insulated. Dimensions: LxWxH 400 x 560 x 560 mm	6046 019

	Part No.
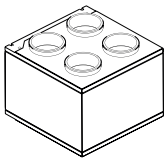 **Acoustic insulating box FRT extract-supply air left** for HomeVent® comfort FRT (251,351,451) Housing made of aluzinc sheet with connection nozzles 4 x DN 160. Extract air rear left, supply air front left Exhaust air back right, fresh air front right Internal acoustic insulating unit All 4 air ducts are sound-insulated. Dimensions: LxWxH 400 x 560 x 560 mm	6046 020
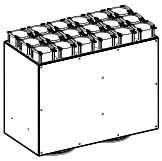 **Distribution box VTB-180 18x75** for HomeVent® comfort FRT (251) Housing made of aluzinc sheet with connection nozzles 2 x DN 180 Connection nozzles 18 x DN 75 Acoustic insulating unit inside supply and extract air side, access panel Insertable throttle orifices per connection Dimensions: LxWxH: 400 x 560 x 374 mm	6045 932
Additional accessories see separate chapter Components.	

Filter HomeVent® comfort FRT (251, 351, 451)

 **Supply air filter for FRT (251,351,451)** for HomeVent® comfort FRT (251,351,451) Large fine dust pollen filter Z construction, filter class $ePM_{1.0}$ 50 % (F7)	5043 550
 **Supply air active carbon filter for FRT (251, 351, 451)** for HomeVent® comfort FRT (251, 351, 451) Large fine dust active carbon filter against particles (pollen, fine dust, etc.), gaseous pollutants and odours Z construction, filter class ePM_{10} 52 %	5043 778
 **Extract air filter FRT (251,351,451)** for HomeVent® comfort FRT (251,351,451) Large coarse dust filter Z construction, filter class ePM_{10} 50 % (G4)	5043 611

HomeVent® comfort FRT (251, 351, 451) ventilation unit

Type		(251)	(351)	(451)
Max. volume flow (at 100 Pa external pressure*)	m³/h	250	350	450
Air flow rate control range	m³/h	50-250	60-350	70-450
Humidity setpoint setting	%		30 … 65	
Electrical connection				
• Voltage (AC)	V		230	
• Frequency	Hz		50	
• Max. current consumption	A	0.76	1.04	1.23
• cos ρ (mean value)		0.44	0.44	0.48
Type of protection			IP 40	
Power consumption (at 70 % of the max. volume flow, 50 Pa external pressure)	W	36	61	97
Degree of heat processing (as per DIN 4719)	%		90-130	
Temperature ratio (at 70 % of the max. volume flow)	%	85	84	82
Humidity ratio (at 70 % of the max. volume flow)	%	90	84	81
Specific fan power SFP (at 70% of the max. volume flow)	W/m³/h	0.21	0.25	0.31
Filter class (as per ISO-16890)				
• Supply air filter			$ePM_{1.0}$ 50 %	
• Extract air filter			ePM_{10} 50 %	
Sound power level			see table on following page	
Leakage (as per EN 13141-7)				
• Internal	%		< 1	
• External	%	1.4	1.0	0.8
Net weight	kg		39	
Application limits for device setup, weather-protected (EN 60721-3-3), 3K5 as per EN 50090-2-2				
• Ambient temperature	°C		-20...45	
• Ambient humidity	g/kg		max. 15	
• Dew point temp. in installation room	°C		< 15	
Air conditions (moderate outdoor climate EN 60721-2-1)				
• Outside air intake temperature	°C		-20...40	
• Outside air intake humidity	% r.h.		5…95	
• Extract air temperature	°C		5…35	
• Extract air humidity	% r.h.		5...80	
• Max. extract air humidity	g/kg		12	

Sound power levels for HomeVent® comfort FRT (251)

Casing

Volume flow	External pressure	L_W [dB]							Sound pressure level L_{WA}
SUP/EXT [m³/h]	[Pa]	125	250	500	1k	2k	4k	8k	63 Hz ... 8 kHz [dB(A)]
175	50	41	44	39	33	26	11	10	40
250	100	47	51	45	40	34	21	12	47

Fresh air

Volume flow	External pressure	L_W [dB]							Sound pressure level L_{WA}
[m³/h]	[Pa]	125	250	500	1k	2k	4k	8k	63 Hz ... 8 kHz [dB(A)]
175	50	30	39	41	32	28	16	8	40
250	100	35	47	47	39	36	25	18	47

Supply air

Volume flow	External pressure	L_W [dB]							Sound pressure level L_{WA}
[m³/h]	[Pa]	125	250	500	1k	2k	4k	8k	63 Hz ... 8 kHz [dB(A)]
175	50	42	44	40	33	25	14	4	40
250	100	44	51	46	39	32	23	14	47

Extract air

Volume flow	External pressure	L_W [dB]							Sound pressure level L_{WA}
[m³/h]	[Pa]	125	250	500	1k	2k	4k	8k	63 Hz ... 8 kHz [dB(A)]
175	50	44	36	34	26	20	8	0	34
250	100	35	43	39	34	27	17	7	40

Exhaust air

Volume flow	External pressure	L_W [dB]							Sound pressure level L_{WA}
[m³/h]	[Pa]	125	250	500	1k	2k	4k	8k	63 Hz ... 8 kHz [dB(A)]
175	50	43	49	47	45	39	26	16	49
250	100	49	52	53	51	46	35	27	55

Sound power: HomeVent® comfort FRT (251) + acoustic insulating box FRT

Casing

Volume flow	External pressure	L_W [dB]							Sound pressure level L_{WA}
SUP/EXT [m³/h]	[Pa]	125	250	500	1k	2k	4k	8k	63 Hz ... 8 kHz [dB(A)]
175	50	42	43	36	27	23	17	15	37
250	100	46	47	41	35	30	16	9	43

Fresh air

Volume flow	External pressure	L_W [dB]							Sound pressure level L_{WA}
[m³/h]	[Pa]	125	250	500	1k	2k	4k	8k	63 Hz ... 8 kHz [dB(A)]
175	50	30	31	26	17	15	14	15	27
250	100	34	36	32	23	20	6	0	33

Supply air

Volume flow	External pressure	L_W [dB]							Sound pressure level L_{WA}
[m³/h]	[Pa]	125	250	500	1k	2k	4k	8k	63 Hz ... 8 kHz [dB(A)]
175	50	30	29	22	10	4	0	0	24
250	100	31	34	27	16	11	0	0	26

Extract air

Volume flow	External pressure	L_W [dB]							Sound pressure level L_{WA}
[m³/h]	[Pa]	125	250	500	1k	2k	4k	8k	63 Hz ... 8 kHz [dB(A)]
175	50	28	30	21	11	4	0	0	24
250	100	31	36	26	17	10	0	0	30

Exhaust air

Volume flow	External pressure	L_W [dB]							Sound pressure level L_{WA}
[m³/h]	[Pa]	125	250	500	1k	2k	4k	8k	63 Hz ... 8 kHz [dB(A)]
175	50	44	33	26	21	21	19	20	30
250	100	41	36	33	29	29	22	21	36

For external pressure loss, the sound insulation box is not taken into account.

Sound power levels for HomeVent® comfort FRT (351)

Casing

Volume flow	External pressure	L_W [dB]							Sound pressure level L_{WA}
SUP/EXT [m³/h]	[Pa]	125	250	500	1k	2k	4k	8k	63 Hz ... 8 kHz [dB(A)]
245	50	42	49	44	35	31	16	10	44
350	100	49	56	54	45	40	28	17	54

Fresh air

Volume flow	External pressure	L_W [dB]							Sound pressure level L_{WA}
[m³/h]	[Pa]	125	250	500	1k	2k	4k	8k	63 Hz ... 8 kHz [dB(A)]
245	50	31	45	46	37	34	23	15	45
350	100	40	53	55	44	42	32	25	53

Supply air

Volume flow	External pressure	L_W [dB]							Sound pressure level L_{WA}
[m³/h]	[Pa]	125	250	500	1k	2k	4k	8k	63 Hz ... 8 kHz [dB(A)]
245	50	42	56	44	37	31	21	11	49
350	100	55	56	57	44	39	30	23	55

Extract air

Volume flow	External pressure	L_W [dB]							Sound pressure level L_{WA}
[m³/h]	[Pa]	125	250	500	1k	2k	4k	8k	63 Hz ... 8 kHz [dB(A)]
245	50	35	46	37	32	25	15	6	40
350	100	45	48	45	39	33	24	15	46

Exhaust air

Volume flow	External pressure	L_W [dB]							Sound pressure level L_{WA}
[m³/h]	[Pa]	125	250	500	1k	2k	4k	8k	63 Hz ... 8 kHz [dB(A)]
245	50	44	50	51	49	44	33	24	53
350	100	56	64	60	56	52	43	35	62

Sound power: HomeVent® comfort FRT (351) + acoustic insulating box FRT

Casing

Volume flow	External pressure	L_W [dB]							Sound pressure level L_{WA}
SUP/EXT [m³/h]	[Pa]	125	250	500	1k	2k	4k	8k	63 Hz ... 8 kHz [dB(A)]
245	50	43	45	39	32	28	12	12	41
350	100	49	51	49	39	36	23	13	48

Fresh air

Volume flow	External pressure	L_W [dB]							Sound pressure level L_{WA}
[m³/h]	[Pa]	125	250	500	1k	2k	4k	8k	63 Hz ... 8 kHz [dB(A)]
245	50	31	34	30	21	18	3	0	30
350	100	34	42	38	28	26	12	5	38

Supply air

Volume flow	External pressure	L_W [dB]							Sound pressure level L_{WA}
[m³/h]	[Pa]	125	250	500	1k	2k	4k	8k	63 Hz ... 8 kHz [dB(A)]
245	50	30	33	25	14	9	0	0	27
350	100	33	36	35	21	17	4	0	33 *

Extract air

Volume flow	External pressure	L_W [dB]							Sound pressure level L_{WA}
[m³/h]	[Pa]	125	250	500	1k	2k	4k	8k	63 Hz ... 8 kHz [dB(A)]
245	50	29	32	23	16	14	16	21	27
350	100	34	39	38	23	16	5	0	36 *

Exhaust air

Volume flow	External pressure	L_W [dB]							Sound pressure level L_{WA}
[m³/h]	[Pa]	125	250	500	1k	2k	4k	8k	63 Hz ... 8 kHz [dB(A)]
245	50	38	34	30	25	25	14	7	32
350	100	49	42	39	33	32	27	17	41

* Additional sound insulation measures are necessary for noise-sensitive rooms.

For external pressure loss, the sound insulation box is not taken into account.

Sound power levels for HomeVent® comfort FRT (451)

Casing

Volume flow	External pressure	L_W [dB]							Sound pressure level L_{WA}
SUP/EXT [m³/h]	[Pa]	125	250	500	1k	2k	4k	8k	63 Hz ... 8 kHz [dB(A)]
315	50	45	55	47	40	35	22	11	50
450	100	53	53	60	48	43	31	18	57

Fresh air

Volume flow	External pressure	L_W [dB]							Sound pressure level L_{WA}
[m³/h]	[Pa]	125	250	500	1k	2k	4k	8k	63 Hz ... 8 kHz [dB(A)]
315	50	35	53	49	41	39	29	22	50
450	100	44	49	58	49	46	38	32	57

Supply air

Volume flow	External pressure	L_W [dB]							Sound pressure level L_{WA}
[m³/h]	[Pa]	125	250	500	1k	2k	4k	8k	63 Hz ... 8 kHz [dB(A)]
315	50	50	56	48	41	37	28	20	52 *
450	100	62	56	60	50	44	37	30	57 *

Extract air

Volume flow	External pressure	L_W [dB]							Sound pressure level L_{WA}
[m³/h]	[Pa]	125	250	500	1k	2k	4k	8k	63 Hz ... 8 kHz [dB(A)]
315	50	41	47	41	35	30	21	10	43 *
450	100	49	47	48	44	37	29	20	48 *

Exhaust air

Volume flow	External pressure	L_W [dB]							Sound pressure level L_{WA}
[m³/h]	[Pa]	125	250	500	1k	2k	4k	8k	63 Hz ... 8 kHz [dB(A)]
315	50	49	58	55	53	49	39	30	58
450	100	59	57	75	61	56	48	42	71

* Additional sound insulation measures are necessary for noise-sensitive rooms.

Sound power: HomeVent® comfortFRT (451) + acoustic insulating box FRT

Casing

Volume flow	External pressure	L_W [dB]							Sound pressure level L_{WA}
SUP/EXT [m³/h]	[Pa]	125	250	500	1k	2k	4k	8k	63 Hz ... 8 kHz [dB(A)]
315	50	46	52	43	37	33	19	8	47
450	100	53	51	56	44	40	28	9	53

Fresh air

Volume flow	External pressure	L_W [dB]							Sound pressure level L_{WA}
[m³/h]	[Pa]	125	250	500	1k	2k	4k	8k	63 Hz ... 8 kHz [dB(A)]
315	50	34	42	33	25	23	9	2	37
450	100	39	38	48	32	29	20	15	44

Supply air

Volume flow	External pressure	L_W [dB]							Sound pressure level L_{WA}
[m³/h]	[Pa]	125	250	500	1k	2k	4k	8k	63 Hz ... 8 kHz [dB(A)]
315	50	33	39	28	17	13	11	16	33 *
450	100	48	37	41	26	23	12	5	38 *

Extract air

Volume flow	External pressure	L_W [dB]							Sound pressure level L_{WA}
[m³/h]	[Pa]	125	250	500	1k	2k	4k	8k	63 Hz ... 8 kHz [dB(A)]
315	50	32	40	27	19	13	1	0	34 *
450	100	39	37	42	28	22	17	16	39 *

Exhaust air

Volume flow	External pressure	L_W [dB]							Sound pressure level L_{WA}
[m³/h]	[Pa]	125	250	500	1k	2k	4k	8k	63 Hz ... 8 kHz [dB(A)]
315	50	51	43	35	51	30	21	17	40
450	100	58	46	49	38	38	29	25	48

* Additional sound insulation measures are necessary for noise-sensitive rooms.

For external pressure loss, the sound insulation box is not taken into account.

Performance chart for air flow rate, HomeVent® comfort FRT (251)

p_{ext} Sum of external pressure drops incl. acoustic insulating box for each air stream at the planned air flow rate.

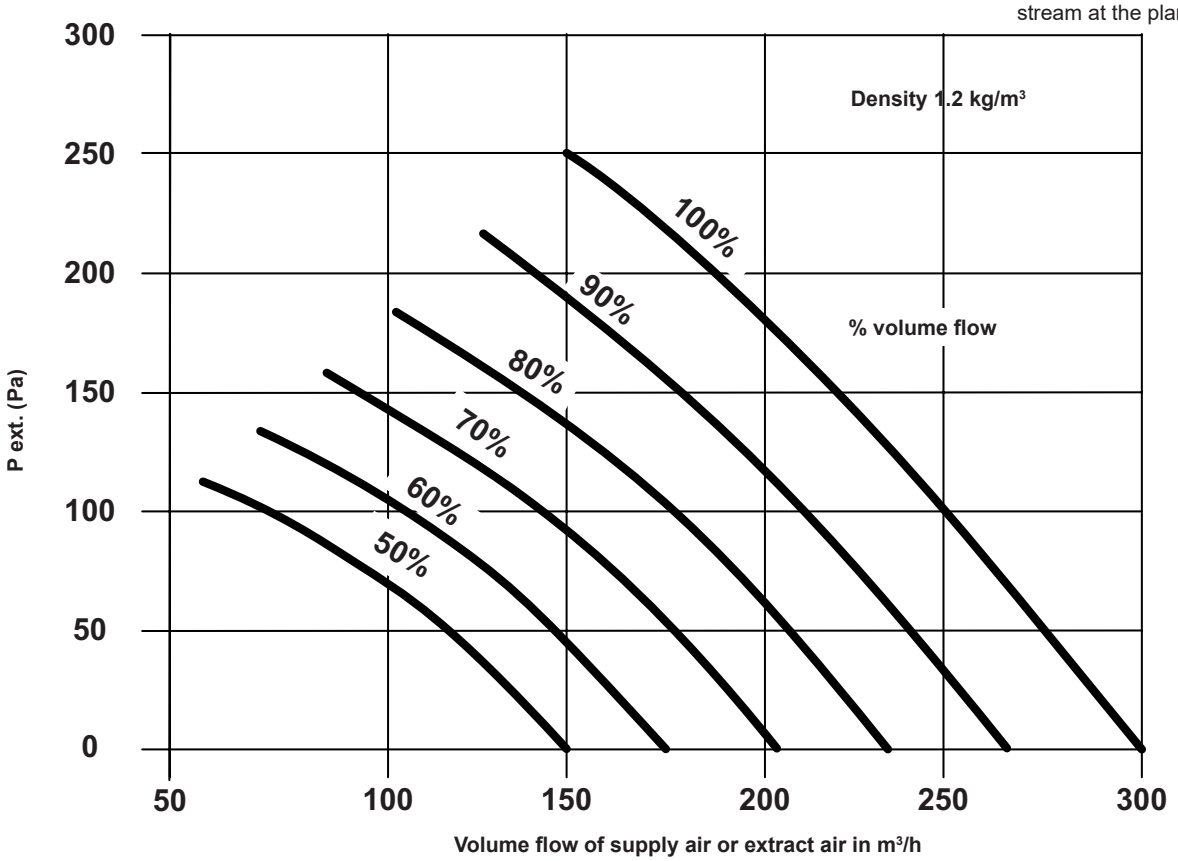

Performance chart for air flow rate, HomeVent® comfort FRT (351)

p_{ext} Sum of external pressure drops incl. acoustic insulating box for each air stream at the planned air flow rate.

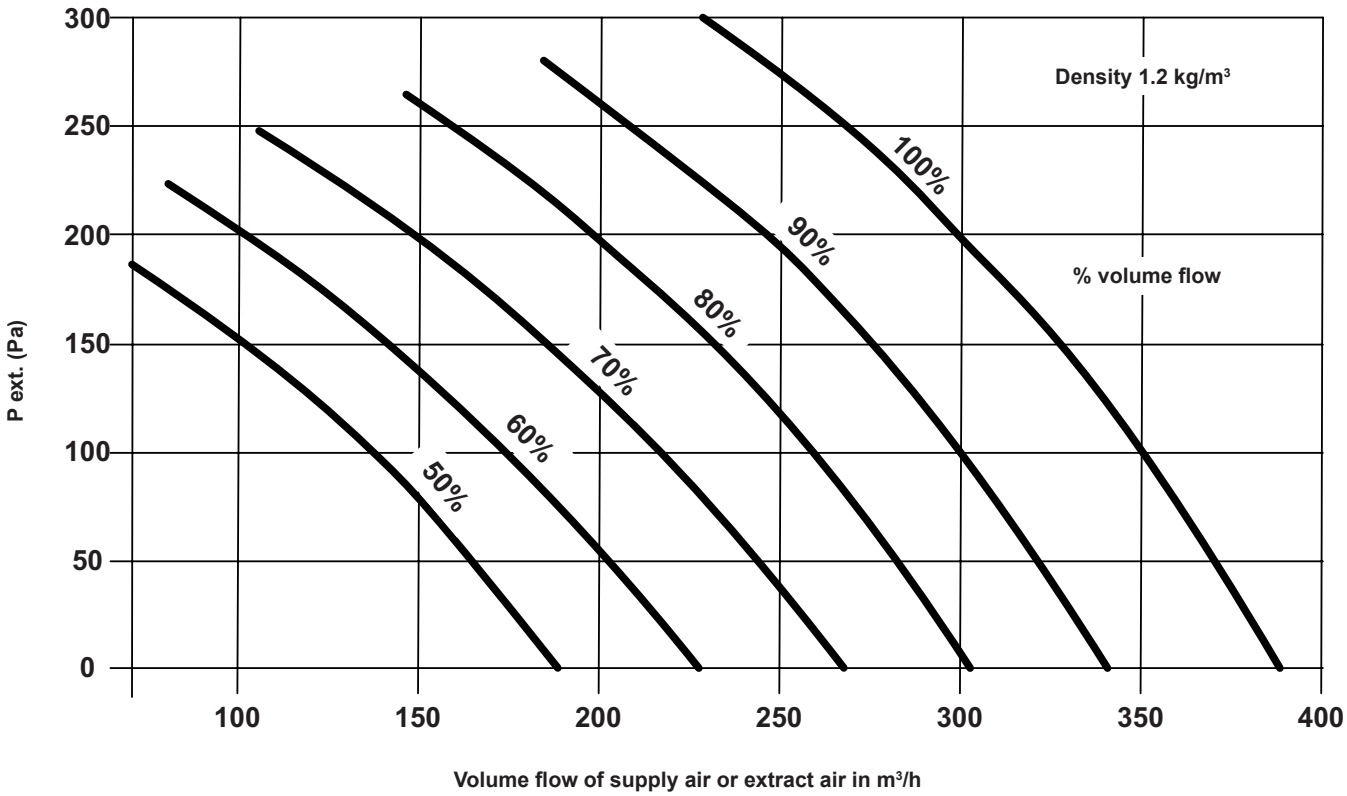

Performance chart for air flow rate, HomeVent® comfort FRT (451)

p_{ext} Sum of external pressure drops incl. acoustic insulating box for each air stream at the planned air flow rate.

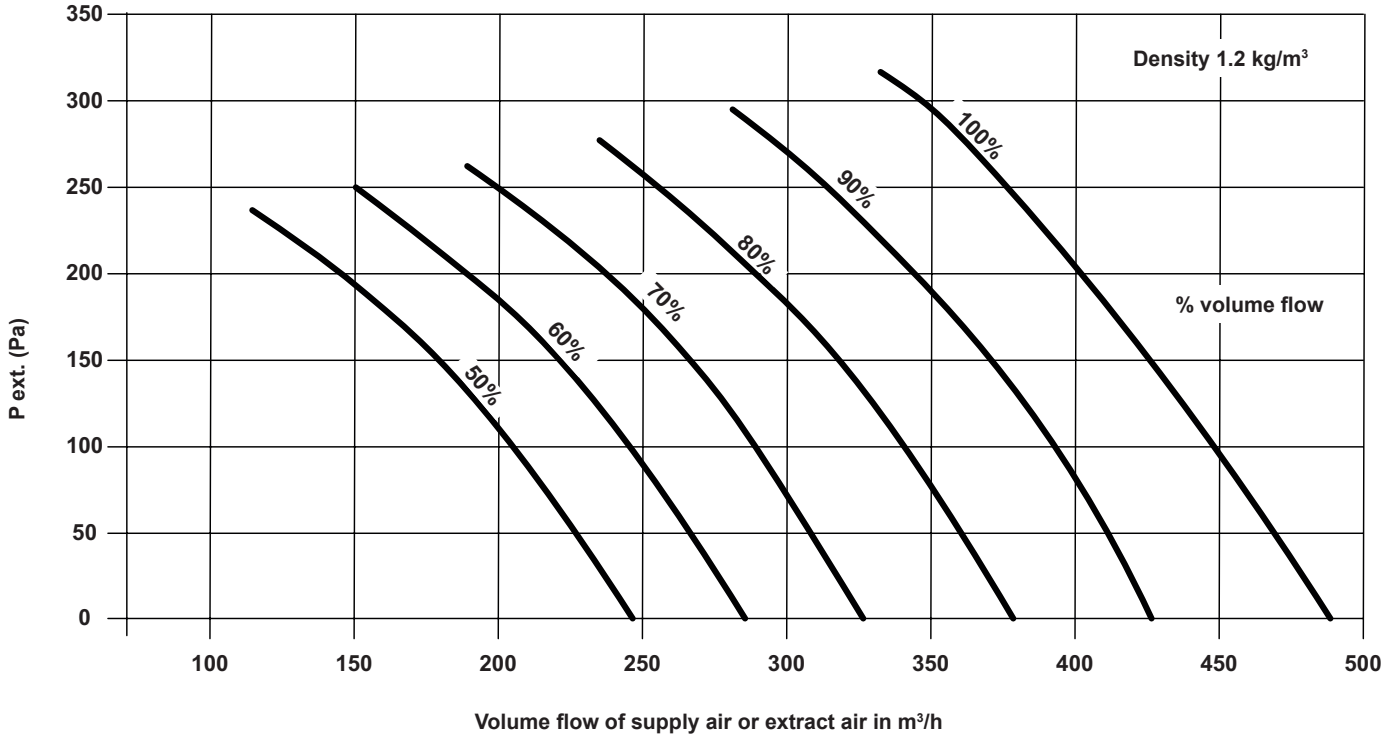

Electrical power consumption HomeVent® comfort FRT (251, 351, 451)

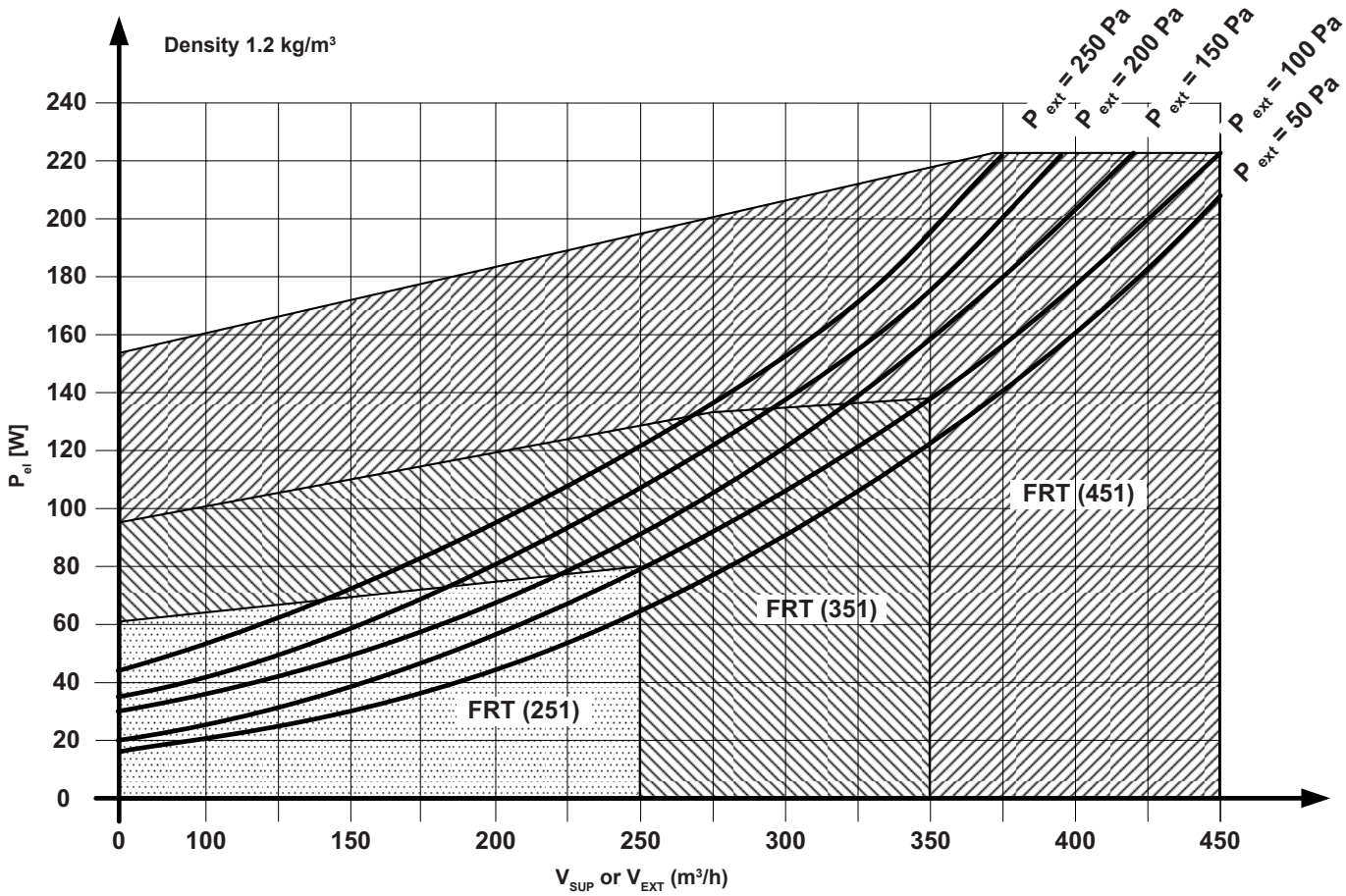

HomeVent® comfort ventilation unit

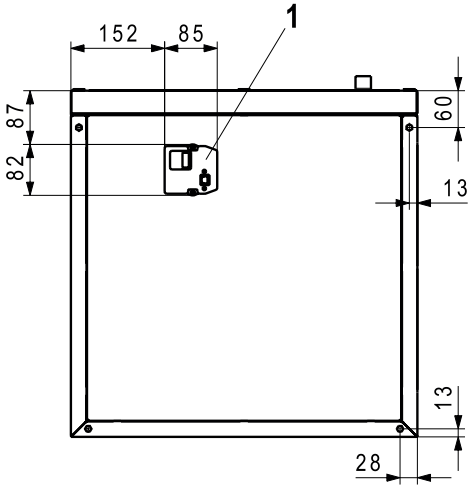

ZUL = supply air
ABL = extract air
FOL = exhaust air
AUL = fresh air

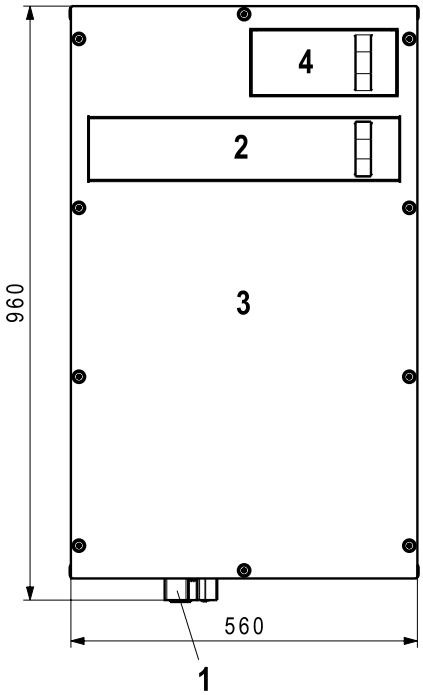

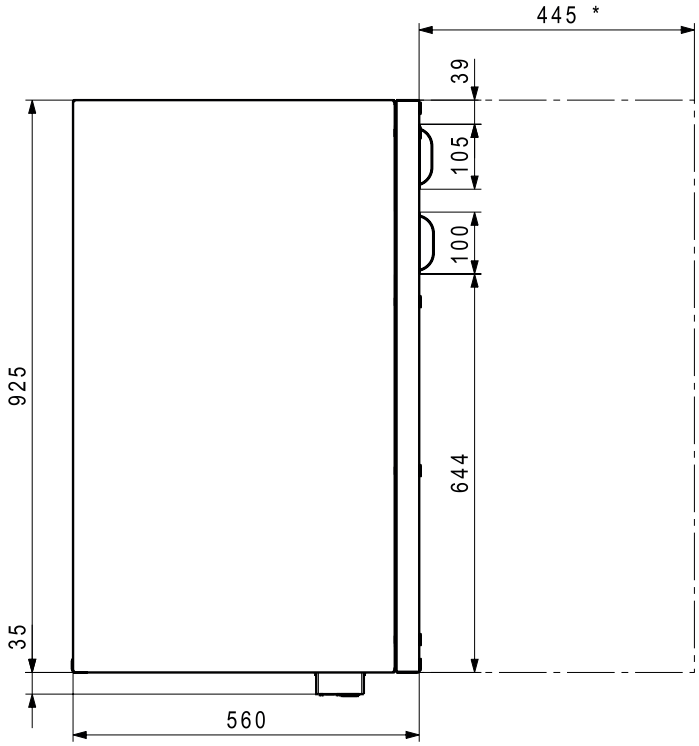

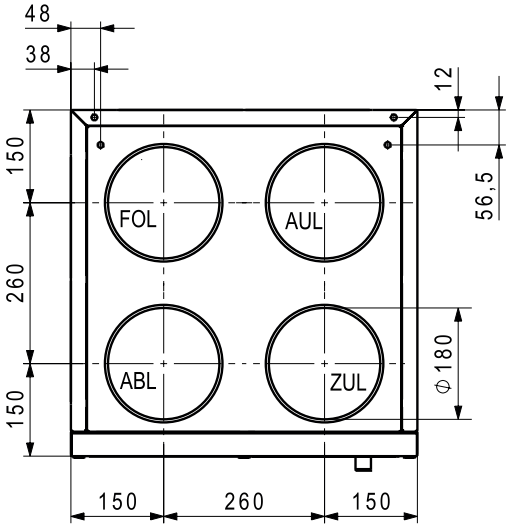

1 Electrical connection with microfuse
Space is required for changing the microfuse.
2 Filter cover for supply air filter/extract air filter
3 Access panel
4 Maintenance cover for prefilter

* Space requirements for filter change and service tasks

HomeVent® comfort ventilation unit with acoustic insulating box and base

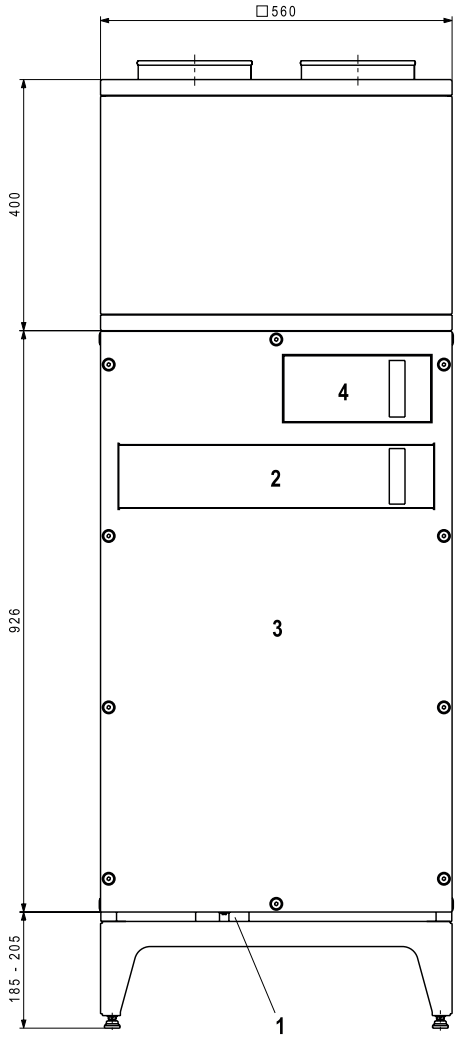

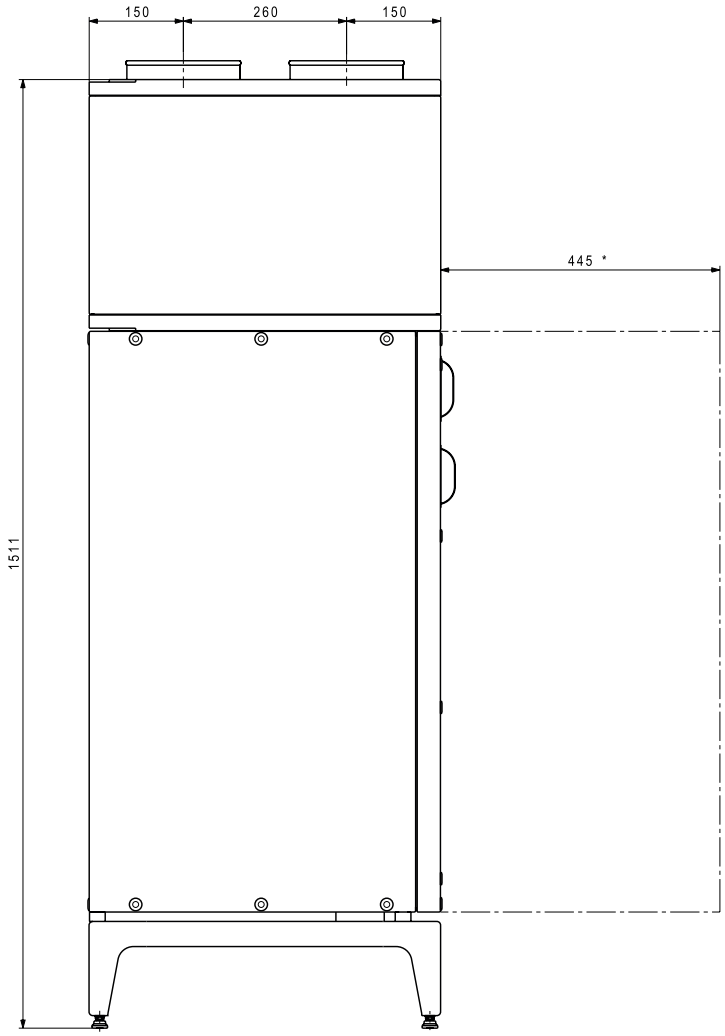

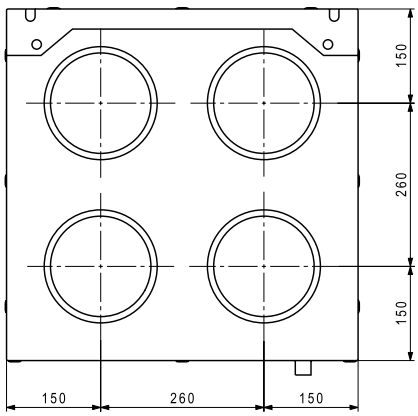

1 Electrical connection with microfuse
Space is required for changing the microfuse.
2 Filter cover for supply air filter/extract air filter
3 Access panel
4 Maintenance cover for prefilter

* Space requirements for filter change and service tasks

Space requirements

HomeVent® comfort ventilation unit

Installation with installation set

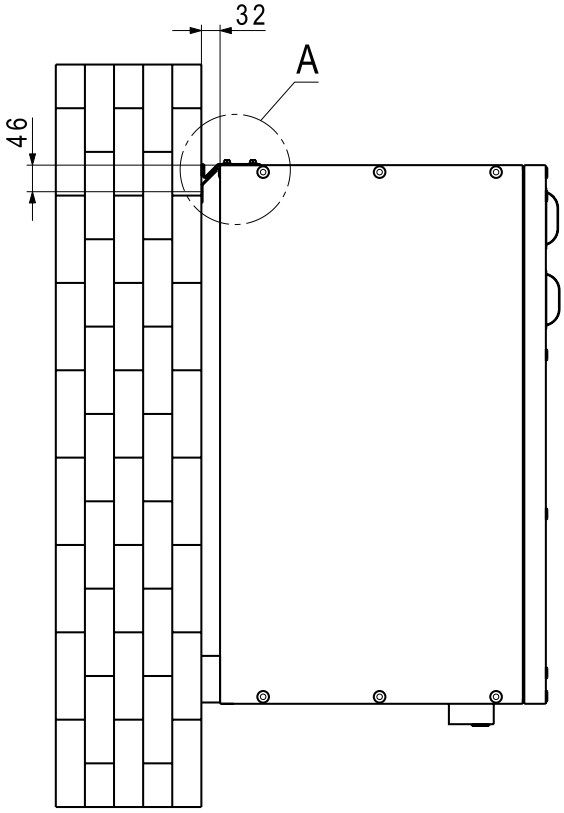

Detail A

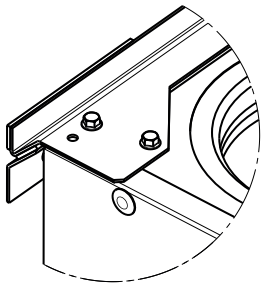

Distribution cases DN 180

Distribution box VTB-180 18x75

for HomeVent® comfort FRT (251)
Housing made of aluzinc sheet with connection nozzles 2 x DN 180
Connection nozzles 18 x DN 75
Acoustic insulating unit inside supply and extract air side, access panel
Insertable throttle orifices per connection
Dimensions: LxWxH: 400 x 560 x 374 mm

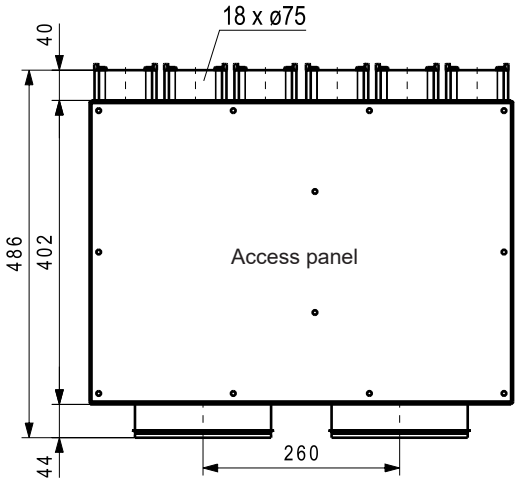

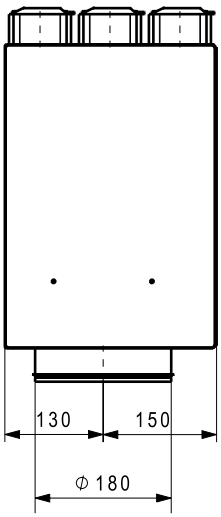

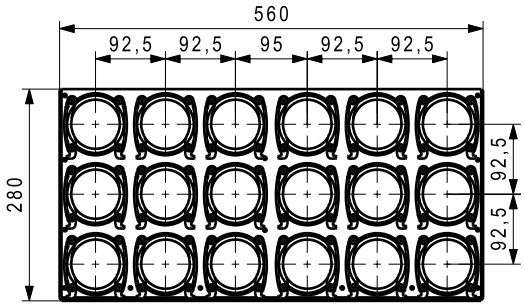

Acoustic insulating box FRT

Casing made from aluzinc sheet with 4 x DN 160 connection nozzles. Sound insulation element inside.
All 4 air ducts are sound-insulated.

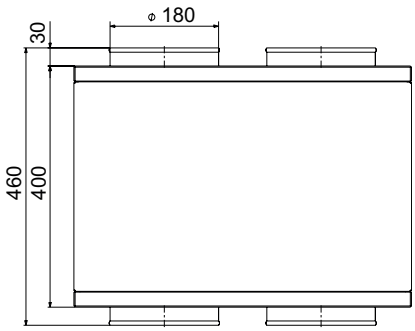

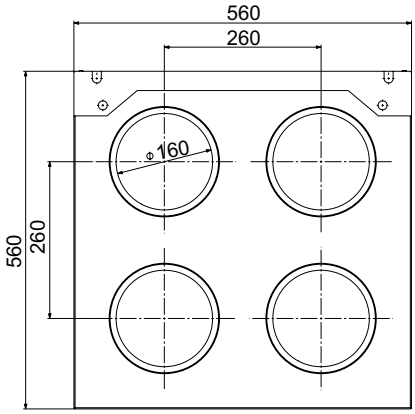

FRT (251) 100 %	
Silencer, straight	
ZUL [Δp Pa]	1
AUL [Δp Pa]	0
FOL [Δp Pa]	0
ABL [Δp Pa]	1

FRT (251) 100 %	
Silencer, on the left/right	
ZUL [Δp Pa]	14
AUL [Δp Pa]	8
FOL [Δp Pa]	11
ABL [Δp Pa]	10

FRT (351) 100 %	
Silencer, straight	
ZUL [Δp Pa]	7
AUL [Δp Pa]	1
FOL [Δp Pa]	2
ABL [Δp Pa]	6

FRT (351) 100 %	
Silencer, on the left/right	
ZUL [Δp Pa]	27
AUL [Δp Pa]	26
FOL [Δp Pa]	21
ABL [Δp Pa]	23

FRT (451) 100 %	
Silencer, straight	
ZUL [Δp Pa]	19
AUL [Δp Pa]	4
FOL [Δp Pa]	10
ABL [Δp Pa]	19

FRT (451) 100 %	
Silencer, on the left/right	
ZUL [Δp Pa]	41
AUL [Δp Pa]	35
FOL [Δp Pa]	31
ABL [Δp Pa]	37

Acoustic insulating box FRT straight

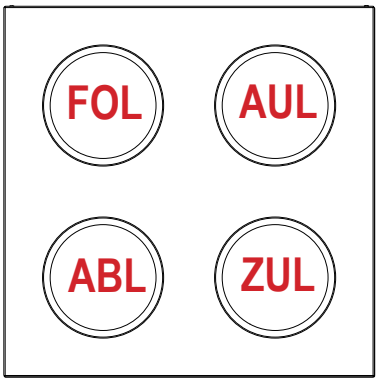

Acoustic insulating box FRT left

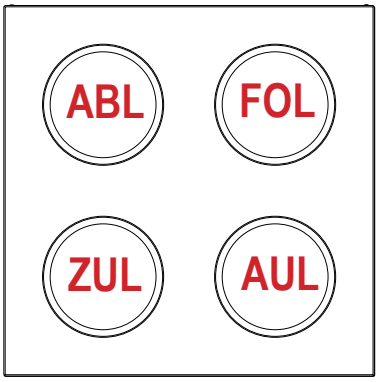

Acoustic insulating box FRT right

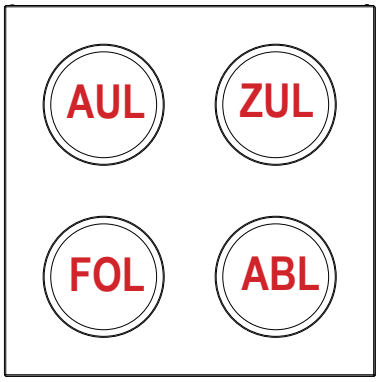

FOL = Exhaust air
AUL = Fresh air
ABL = Extract air
ZUL = Supply air

Pipe system DN 150 of sheet steel

		Part No.
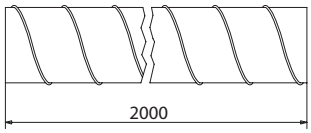	**Spiral-seam tube WFR-150** of galvanised sheet steel DN 150, length: 2 m	2045 240
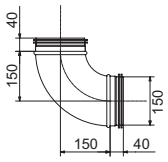	**Pipe bend BU-150-90** 90° bend of galvanised sheet steel with double lip seal DN 150	2015 667
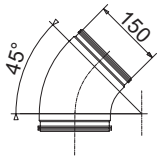	**Pipe bend BU-150-45** 45° bend of galvanised sheet steel with double lip seal DN 150	2022 208
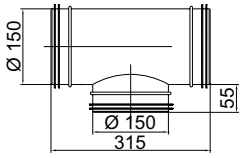	**T-piece TCPU-150-150** of galvanised sheet steel with double lip seal DN 150/ DN 150/ DN 150	2024 255
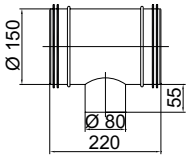	**T-piece TCPU-150-80** of galvanised sheet steel with double lip seal DN 150/ DN 80/ DN 150	2024 257
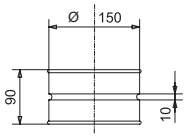	**Sleeve MF-150** of galvanised sheet steel DN 150	2015 668
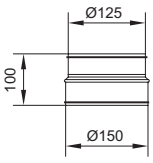	**Reduction/extension RCFU-150-125** of galvanised sheet steel with double lip seal DN 150 sleeve/ DN 125 nipple	2040 384

	Part No.
Pipe system DN 150 of sheet steel	
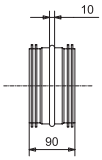 **Nipple NPU-150** of galvanised sheet steel with double lip seal DN150	2015 669
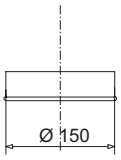 **End cover ED-150** of galvanised sheet steel DN 150	2023 569
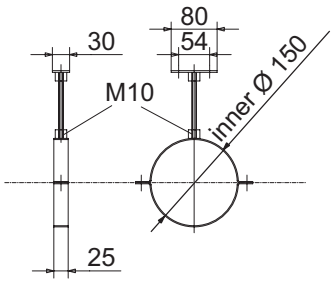 **Pipe clamp ROS-150** of galvanised steel 2-section pipe clamp with insulation insert, threaded rod 0.2 m and ground plate. DN 150	6008 428
Thermal insulation DN 150	
Caution: Comply with the regional regulations with regard to thermal insulation.	
 **Thermal insulation tube IS-150-25** for spiral-seam tube WFR-150 made of steam-tight EPDM 3 tubes of 2 m each Insulation thickness: 25 mm	2023 559
 **Thermal insulation IB-150/160-90** for pipe bend BU-150/160-90 made of steam-tight EPDM Insulation thickness: 25 mm	2023 560
 **Thermal insulation IB-150/160-45** for pipe bend BU-150/160-45 made of steam-tight EPDM Insulation thickness: 25 mm	2023 561
 **Adhesive IK** for thermal insulation ready-to-use adhesive with brush 0.25 litre can	2023 562
 **Adhesive tape IKB** for thermal insulation made of EPDM Thickness: 3 mm, width: 50 mm, roll: 15 m	2023 563

Thermal insulation DN 150

	Part No.
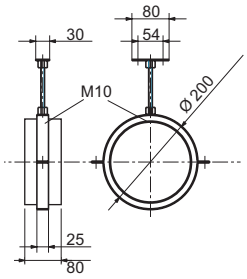 **Pipe clip ROSI-200** **with thermal insulation sleeve** for spiral-seam tube DN 150 of galvanised steel 2-section pipe clip with insulation insert and insulation sleeve, threaded rod 0.2 m and ground plate. DN 200	6013 043

Pipe system DN 150
IsiPipe made of EPP

Only as supply air and extract air line within the heated building envelope.

Caution:
Comply with the regional regulations with regard to thermal insulation.

 **IsiPipe tubing EPP-150-500** made of steam-tight EPP incl. EPP sleeve DN 150, material thickness: 15 mm, Length: 0.5 m	2045 739
 **IsiPipe tubing EPP-150-1000** made of steam-tight EPP incl. EPP sleeve DN 150, material thickness: 15 mm, length: 1 m	2045 740
 **IsiPipe pipe bend EPP-150-90** Bend 90°, made of steam-tight EPP incl. EPP sleeve DN 150, material thickness: 15 mm	2045 741
 **IsiPipe pipe bend EPP-150-45** Bend 45°, made of steam-tight EPP incl. EPP sleeve DN 150, material thickness: 15 mm	2045 742
 **IsiPipe sleeve EPP-150** made of steam-tight EPP DN 150, material thickness: 15 mm	2045 743
 **Pipe clamp ROS-X** for IsiPipe of galvanised steel semicircular pipe clamp, cable tie and hanger bolt M8 60 mm including anchor	2045 744

Accessories DN 150

		Part No.
	**Cowl HA-250** for spiral-seam tube DN 150 for outside and exhaust air of galvanised sheet steel DN150	2016 219
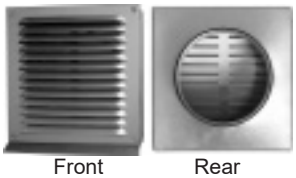 Front Rear	**Weatherproof grille WG-150** for spiral-seam tube DN 150 for outside and exhaust air of aluminium with rain lug, can be painted with double lip seal, pipe nozzle DN 150	6013 045
	**Stainless steel cowl AAS-150** for spiral-seam tube DN 150, galvanic isolation of the connection for outside and exhaust air of stainless steel, lamella cowl, 1 pipe DN 150, length: 0.5 m, 2 pipes DN 150, length: 1 m and 2 wall mountings	6010 185
	**Stainless steel segment pipe bend CRB-150-90** for spiral-seam tube DN 150, galvanic isolation of the connection 90° bend of stainless steel DN 150	2040 722

Accessories DN 150

	Part No.
 **Sound absorber SD-150-500** for spiral-seam tube DN 150 rectangular casing of galvanised sheet steel, with double lip seal DN 150, dimensions: 290 x 215 mm, Length: 0.5 m	2016 224
 **Exhaust air nozzle FST-150** for spiral-seam tube DN 150 of galvanised sheet steel with bird protection grille DN 150 for horizontal installation	2029 384
 **Shut-off damper DTU-150** for spiral-seam tube DN 150 sealed shut-off damper for manual operation of galvanised steel sheet DN 150	2024 261
 **Cold-shrink tape** for sealing air ducts, heat and cold resistant width: 50 mm, roll: 15 m	2021 796
 **Ventilation silicone** for sealing air ducts, heat and cold resistant odourless	3000 009

Pipe system DN 160 of sheet steel

		Part No.
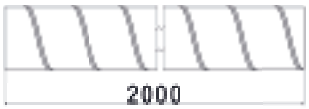	**Spiral-seam tube WFR-160** of galvanised sheet steel DN 160, length: 2 m	2074 487
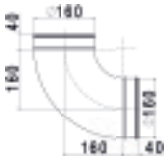	**Pipe bend BU-160-90** 90° bend of galvanised sheet steel with double lip seal DN 160	2074 488
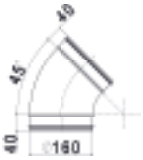	**Pipe bend BU-160-45** 45° bend of galvanised sheet steel with double lip seal DN 160	2074 489
	**T-piece TCPU-160-160** of galvanised sheet steel with double lip seal DN 160/ DN 160/ DN 160	2074 490
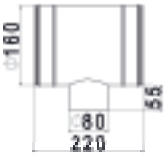	**T-piece TCPU-160-80** of galvanised sheet steel with double lip seal DN 160/ DN 80/ DN 160	2074 491
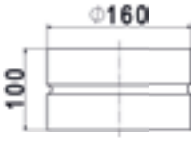	**Sleeve MF-160** of galvanised sheet steel DN 160	2074 492
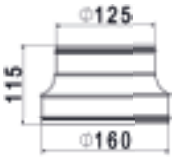	**Reduction/extension RCFU-160-125** of galvanised sheet steel with double lip seal DN 160 sleeve/ DN 125 nipple	2074 493
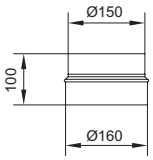	**Reduction/extension RCU-160-150** of galvanised sheet steel with double lip seal DN 160 nipple/DN 150 nipple	2024 260
	**Nipple NPU-160** of galvanised sheet steel with double lip seal DN160	2074 504
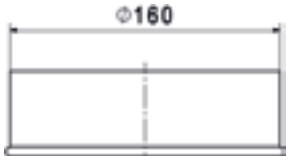	**End cover ED-160** of galvanised sheet steel DN 160	2074 505

	Part No.
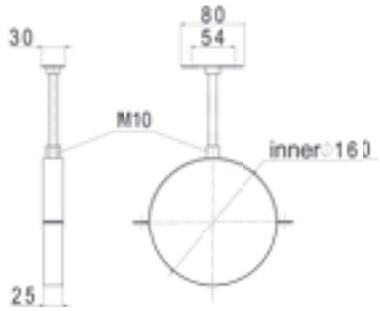 **Pipe clamp ROS-160** of galvanised steel 2-section pipe clamp with insulation insert, threaded rod 0.2 m and ground plate. DN 160	6050 007

Thermal insulation DN 160

Caution:
Comply with the regional regulations with regard to thermal insulation.

 **Thermal insulation tube IS-160-25** for spiral-seam tube WFR-160 made of steam-tight EPDM 3 tubes of 2 m each Insulation thickness: 25 mm	2074 507

Notice:
Use thermal insulation for pipe bend DN 160 of DN 150

Pipe system DN 160
IsiPipe made of EPP

 **IsiPipe piping EPP-160-1000** Thermally insulated pipe Material: EPP, wall thickness 15 mm Inner Ø 160 mm, length: 1000 mm	2075 571
 **IsiPipe pipe bend EPP-160-90°** Thermally insulated pipe bend 90° Material: EPP, wall thickness 15 mm Inner Ø 160 mm	2075 572
 **IsiPipe pipe bend EPP-160-45°** Thermally insulated pipe bend 45° Material: EPP, wall thickness 15 mm Inner Ø 160 mm	2075 573
 **IsiPipe sleeve EPP-160** Thermally insulated sleeve Material: EPP, wall thickness 15 mm L: 80 mm Inner Ø 160 mm	2075 594

Pipe system DN 160
IsiPipe made of EPP

		Part No.
	**IsiPipe Plus pipeline EPP-160-1000** Thermally insulated pipe Material: EPP, wall thickness 43 mm Inner Ø 160 mm, outer Ø 246 mm Length: 1000 mm incl. sleeve (60 mm)	2065 110
	**IsiPipe Plus pipe bend EPP-160-45°** Thermally insulated pipe bend 45° Material: EPP, wall thickness 43 mm Inner Ø 160 mm, outer Ø 246 mm	2065 112
	**IsiPipe Plus sleeve EPP-160** Thermally insulated sleeve Material: EPP, wall thickness 43 mm l: 80 mm Inner Ø 160 mm, outer Ø 286 mm	2065 124
	**IsiPipe Plus ecc. adapter EPP-150-160** Thermally insulated ecc. adapter Material:EPP, eccentrical 38 mm l:250 mm Inner Ø 150 mm on IsiPipe Plus 160	2065 126
	**IsiPipe Plus ecc. adapter EPP-160-160** Thermally insulated ecc. adapter Material:EPP, eccentrical 38 mm l:250 mm Inner Ø 160 mm on IsiPipe Plus 160/200	2065 127
	**Pipe clamp ROS 160-200** to IsiPipe plus Semi-circular pipe clip from galvanized steel including cable tie. Hanger bolt 60 mm including anchor	2069 624
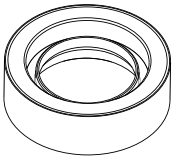	**IsiPipe plus device adapter 160** Thermally insulated connection of the pipes - IsiPipe 160 - IsiPipe Plus 160 to sound insulation boxes FRT 2 Pieces	6052 925

Accessories DN 160

		Part No.
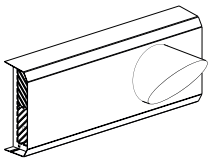	**Wall outlet right** for Ø160, exhaust air on the right side made of galvanised sheet metal	6045 328
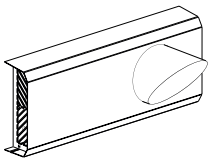	**Wall outlet right, white** for Ø160, exhaust air on the right side made of galvanised sheet metal white coated (RAL 9016)	6045 327
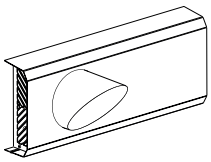	**Wall outlet left** for Ø160, exhaust air on the left side made of galvanised sheet metal	6045 330
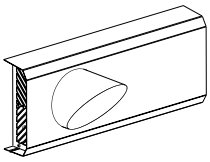	**Wall outlet left, white** for Ø160, exhaust air on the left side made of galvanised sheet metal white coated (RAL 9016)	6045 329
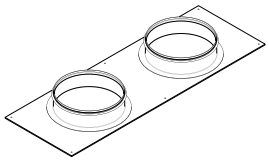	**Plywood** for wall outlet, for Ø160	6045 349
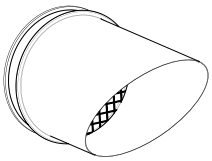	**Exhaust air nozzle FST-160** for spiral-seam tube DN 160 of galvanised sheet steel with bird protection grille DN 160 for horizontal installation	2070 412
	**Weatherproof grille WG-160** for spiral-seam tube DN 160 for outside and exhaust air of aluminium with rain lug, can be painted with double lip seal, pipe nozzle DN 160	2074 510
	**Sound absorber SD-160-500** for spiral-seam tube DN 160 rectangular casing of galvanised sheet steel, with double lip seal DN 160, dimensions: 290 x 215 mm, Length: 0.5 m	2074 514
	**Shut-off damper DTU-160** for spiral-seam tube DN 160 sealed shut-off damper for manual operation of galvanised steel sheet DN 160	2074 513

Pipe system DN 180

		Part No.
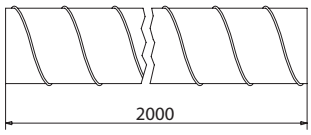	**Spiral-seam tube WFR-180** of galvanised sheet steel DN 180, 2 m long	2057 030
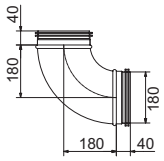	**Pipe bend BU-180-90** 90° bend of galvanised sheet steel with double lip seal DN 180	2057 047
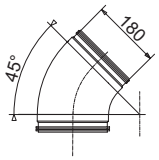	**Pipe bend BU-180-45** 45° bend of galvanised sheet steel with double lip seal DN 180	2057 048
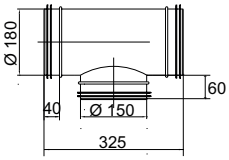	**T-piece TCPU-180-150-180** of galvanised sheet steel with double lip seal DN 180/ DN 150/ DN 180	2057 050
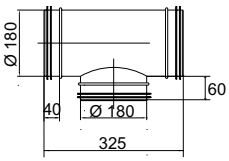	**T-piece TCPU-180-180-180** of galvanised sheet steel with double lip seal DN 180/ DN 180/ DN 180	2057 049
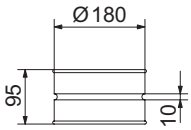	**Sleeve MF-180** of galvanised sheet steel DN 180	2057 051
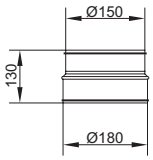	**Reduction/extension RCU-180-150** of galvanised sheet steel with double lip seal DN 180 nipple/ DN 150 nipple	2057 052
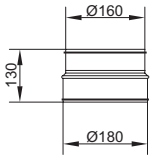	**Reduction/extension RCU-180-160** made of galvanised sheet steel with double lip seal DN 180 nipple / DN 160 nipple	2070 976
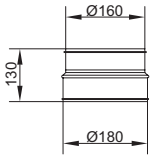	**Reduction/extension RCFU-180-160** made of galvanised sheet steel with double lip seal DN 180 sleeve / DN 160 nipple	2070 975

Pipe system DN 180

		Part No.
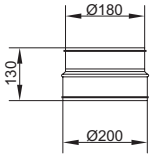	**Reduction/extension RCU-200-180** of galvanised sheet steel with double lip seal DN 200 nipple/ DN 180 nipple	2057 053
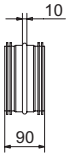	**Nipple NPU-180** of galvanised sheet steel with double lip seal DN 180	2057 064
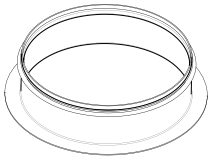	**Spigot ILX Ø 180 x 40 mm** with flange and lip seal	2070 895
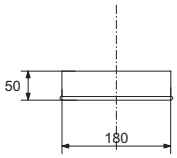	**End cover ED-180** of galvanised sheet steel DN 180	2057 065
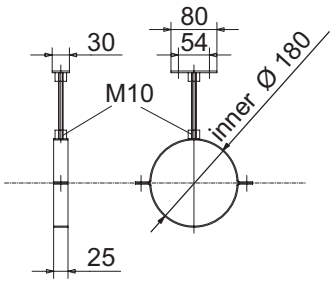	**Pipe clamp ROS-180** of galvanised sheet steel 2-section pipe clamp with insulation insert, threaded rod 0.2 m and ground plate. DN 180	6034 767

Accessories DN 180

		Part No.
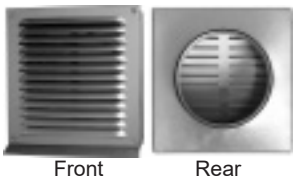 Front Rear	**Weatherproof grille WG-180** for spiral-seam tube DN 180 for outside and exhaust air of aluminium with rain lug, can be painted, with double lip seal, pipe nozzle DN 180	2057 068
	**Fresh air suction set AAS-180** for spiral-seam tube DN 180 galvanic isolation of the connection for outside and exhaust air of stainless steel, lamella cowl, 1 tube DN 180, length: 0.5 m, 2 tubes DN 180, length: 1 m and 2 wall fastenings	6034 766
	**Stainless steel pipe bend CRB-180-90** for spiral-seam tube DN 180, galvanic isolation of the connection 90° bend of stainless steel DN 180	2057 066
	**Exhaust air nozzle FST-180** for spiral-seam tube DN 180 of galvanised sheet steel with bird protection grille DN 180 for horizontal installation	2057 069
	**Silencer FSR-180-750** **for spiral-seam tube DN 180** rectangular casing made of galvanised sheet steel, with double lip seal, DN 180, Dimensions: 480 x 250 mm, length: 0.75 m	2057 874
	**Silencer FLSDA-180-1000** **for spiral-seam tube DN 180** Silencer outside manufactured from flexible aluminium envelope tube, inside from perforated aluminium tube, with double lip seal, DN 180, packing thickness 50 mm, length: 1 m	2057 875

Pipe system DN 200

		Part No.
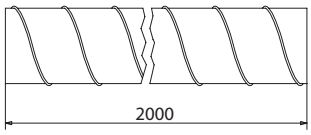	**Spiral-seam tube WFR-200** of galvanised sheet steel DN 200, length: 2 m	2045 707
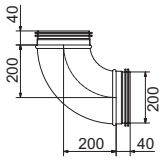	**Pipe bend BU-200-90** 90° bend of galvanised sheet steel with double lip seal DN 200	2040 734
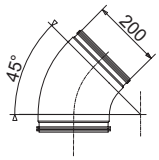	**Pipe bend BU-200-45** 45° bend of galvanised sheet steel with double lip seal DN 200	2040 735
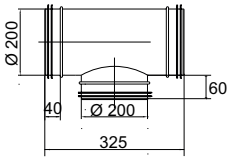	**T-piece TCPU-200-200** of galvanised sheet steel with double lip seal DN 200/ DN 200/ DN 200	2040 736
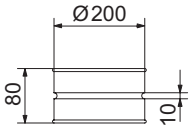	**Sleeve MF-200** of galvanised sheet steel DN 200	2040 737
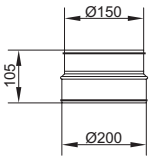	**Reduction/extension RCU-200-150** of galvanised sheet steel with double lip seal DN 200 nipple/DN 150 nipple	2040 738
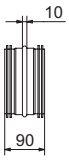	**Nipple NPU-200** of galvanised sheet steel with double lip seal DN 200	2040 739
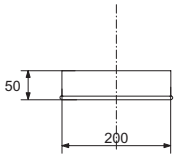	**End cover ED-200** of galvanised sheet steel DN 200	2040 740
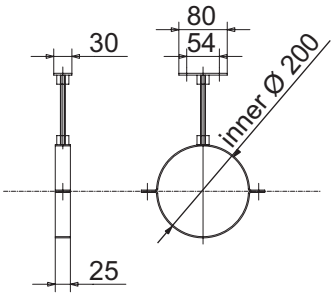	**Pipe clamp ROS-200** of galvanised steel 2-section pipe clamp with insulation insert, threaded rod 0.2 m and ground plate. DN 200	6025 970

Accessories DN 200

	Part No.
 Front Rear **Weatherproof grille WG-200** for spiral-seam tube DN 200 for outside and exhaust air of aluminium with rain lug, can be painted with double lip seal, pipe nozzle DN 200	2040 742
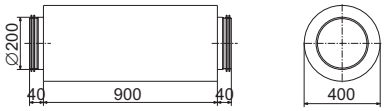 **Silencer SD-200-1000** for spiral-seam tube DN 200 round casing of galvanised sheet steel, with double lip seal, DN 200, outer diameter: 400 mm, length: 0.9 m	2040 743
 **Stainless steel cowl AAS-200** for spiral-seam tube DN 200, galvanic isolation of the connection for outside and exhaust air of stainless steel, lamella cowl, 1 pipe DN 200, length: 0.5 m, 2 pipes DN 200, length: 1 m and 2 wall mountings	6031 914
 **Stainless steel segment pipe bend CRB-200-90** for spiral-seam tube DN 200, galvanic isolation of the connection 90° bend of stainless steel DN 200	2054 221
 **Exhaust air nozzle FST-200** for spiral-seam tube DN 200 of galvanised sheet steel with bird protection grille DN 200 for horizontal installation	2054 220

IsiPipe Plus Pipe system EPP DN 200

		Part No.
	**IsiPipe Plus pipeline EPP-200-1000** Thermally insulated pipe Material: EPP, wall thickness 43 mm Inner Ø 200 mm, outer Ø 286 mm Length: 1000 mm incl. sleeve (60 mm)	2065 111
	**IsiPipe Plus pipe bend EPP-200-45°** Thermally insulated pipe bend 45° Material: EPP, wall thickness 43 mm Inner Ø 200 mm, outer Ø 286 mm	2065 113
	**IsiPipe Plus sleeve EPP-200** Thermally insulated sleeve Material: EPP, wall thickness 43 mm l: 80 mm Inner Ø 200 mm, outer Ø 326 mm	2065 125
	**IsiPipe Plus ecc. adapter EPP-180-200** Thermally insulated ecc. adapter Material:EPP, eccentrical 48 mm l:250 mm Inner Ø 180 mm on IsiPipe Plus 200	2065 128
	**Pipe clamp ROS 160-200** to IsiPipe plus Semi-circular pipe clip from galvanized steel including cable tie. Hanger bolt 60 mm including anchor	2069 624

Flex pipe system DN 75

		Part No.
	**Flexible pipe flex 75** of polyethylene PE-HD DN 75, inner Ø: 62 mm, roller: 50 m smooth inner/ribbed outer surface, antistatic coating	2072 166
	**Sealing ring DI-75 black** for flexible pipe DN 75 DN 75	2016 227
	**Stopper 75** For flexible pipe flex 75 Sealing plug	2072 168

Accessories DN 75

Order the sealing rings for the accessories separately. For quick and simple installation, all accessories are equipped with snap-on clip for attachment of the flexible pipe.

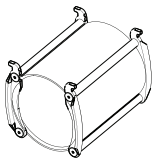	**Double sleeve DM-75** for flexible pipe DN 75 for connecting flexible pipes DN 75	6022 896
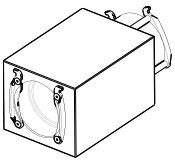	**Helmholtz silencer HSD-75** for flexible pipe DN 75 for acoustically sensitive rooms attenuates low frequencies (500 Hz) DN 75	6020 756

Accessories DN 75

Order the sealing rings for the accessories separately. For quick and simple installation, all accessories are equipped with snap-on clip for attachment of the flexible pipe.

		Part No.
	**Formwork coupling SK-75** for flexible pipe DN 75 for extending a flexible pipe through the ceiling or the floor without damaging the boarding DN 75	6013 047
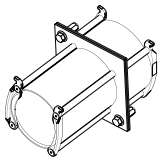	**Formwork coupling SK-75/90** for flexible pipe DN 75 and 90 for extending a flexible pipe through the ceiling or the floor and extension from DN 75 to DN 90 without damaging the boarding.	6030 820
	**Pipe bend RB-75** for flexible pipe DN 75 for connecting flexible pipes at an angle of 90° DN 75	6022 967
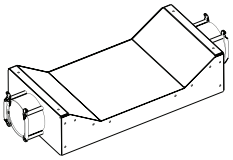	**Flexible pipe crossing FRK-75** for flexible pipe DN 75 for crossing two flexible pipes DN 75 with reduced construction height (100 mm). For one crossing 2 pieces are necessary.	6031 011
	**Cable tie: 4.8 x 302 mm** As additional protection of the snap clip of the accessories for flex pipe with increased load. 100 pcs./package Colour: natural	2057 027
	**Cable tie: 7.6 x 370 mm** For attaching flex pipes to the reinforcement. 100 pcs./package Colour: natural	2057 028
	**Cable tie: 9.0 x 610 mm** For attaching flex pipes to the reinforcement. 50 pcs./package Colour: natural	2057 029

Flex pipe system DN 90

		Part No.
	**Flexible pipe flex 90** of polyethylene PE-HD DN 90, inner Ø: 75 mm, roller: 50 m smooth inner/ribbed outer surface, antistatic coating	2072 167
	**Sealing ring DI-90 black** for flexible pipe DN 90 DN 90	5031 311
	**Stopper 90** For flexible pipe flex 90 Sealing plug	2072 169

Accessories DN 90

Order the sealing rings for the accessories separately. For quick and simple installation, all accessories are equipped with snap-on clip for attachment of the flexible pipe.

	**Pipe elbow RB-90/90°** for flexible pipe DN 90 for connecting flexible pipes at an angle of 90°	6043 275
	**Double sleeve DM-90** for flexible pipe DN 90 for connecting flexible pipes DN 90	6022 494
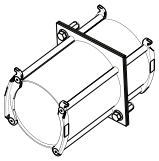	**Formwork coupling SK-90** for flexible pipe DN 90 for extending a flexible pipe through the ceiling or the floor without damaging the boarding DN 90	6022 495
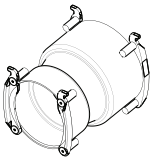	**Reduction/extension RCFU-90-75** for connecting flexible pipe DN 90 with flexible pipe DN 75 of plastic	6022 514
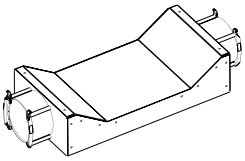	**Flexible pipe crossing FRK-90** for flexible pipe DN 90 for crossing two flexible pipes DN 90 with reduced construction height (100 mm). For one crossing 2 pieces are necessary.	6031 012

Cable ties can be found under “Flexible pipe DN 75”.

Flat channel system DN 100

	Part No.
 **Flat channel 100** Flexible ventilation pipe 102 x 49 mm Roll length 50 m	2071 003
 **Stopper flat channel 100** for flat channel 100 Sealing plug for building protection	2072 404
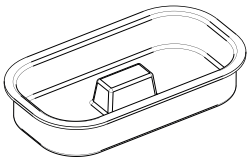 **Stopper flat 100** for flat channel system 100 for sealing unnecessary connections for outlet round side 90° 125-2 x 100, outlet round front 125-2 x 100 and floor exhaust flat 2 x 100	2071 004
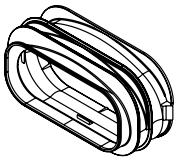 **Seal flat 100** for flat channel 100	2071 005
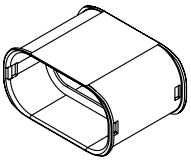 **Sleeve 100** for flat channel 100	2071 006
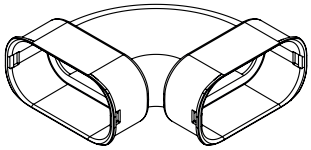 **Arch horizontal flat 100** for flat channel 100	2071 007
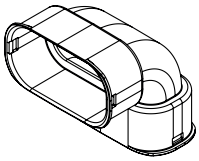 **Arch vertical flat 100** for flat channel 100	2071 008
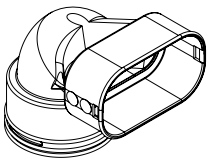 **Arch vertical flat to round 100-75** Transition 90° round to flat	2071 009
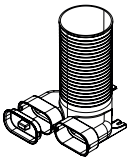 **Outlet round, lateral 90° 125 - 2 x 100** for flat channel 100 incl. mounting bracket, 1x stopper 100 for poppet valve DN 125 supply air 40 m³/h extract air 50 m³/h	2071 010
 **Outlet round, front 125 - 2 x 100** for flat channel 100 incl. mounting bracket, 1x stopper 100 for poppet valve DN 125 supply air 40 m³/h extract air 50 m³/h	2071 011
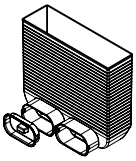 **Floor exhaust flat 2 x 100** for floor grille inox and white 309 x 86,5 mm interior incl. 1x stopper 100 2 flat channel 100 connections	2071 012

Flat channel system DN 140

		Part No.
	**Flat channel 140** Flexible ventilation pipe 142 x 49 mm Roll length 20 m	2071 013
	**Stopper flat channel 140** for flat channel 140 Sealing plug for building protection	2072 406
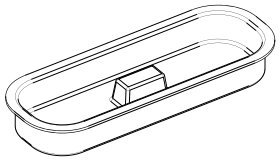	**Stopper flat 140** for flat channel system 140	2071 014
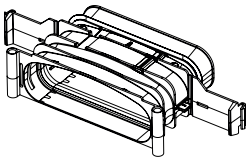	**Seal flat 140** for flat channel 140	2071 015
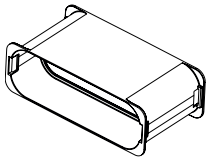	**Sleeve 140** for flat channel 140	2071 016
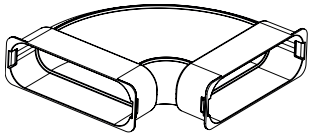	**Arch horizontal flat 140** for flat channel 140	2071 017
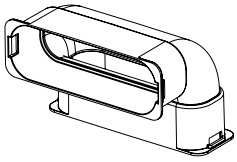	**Arch vertical flat 140** for flat channel 140	2071 018
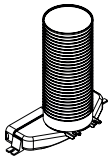	**Outlet round, lateral 90° 125 - 2 x 140** for flat channel 140 incl. mounting bracket, 1x stopper 140 for poppet valve DN 125 supply air 40 m³/h extract air 50 m³/h	2071 019
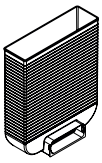	**Floor exhaust flat 1 x 140** for floor grille inox and white 309 x 85 mm inside 1 connection flat channel 140	2071 020
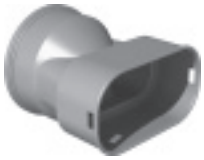	**Adapter flat to round 140-90,** made of plastic	2071 001
	**Flat channel intersection 140-90** Consisting of: 1 metre flat channel 140 2 adapters flat to round 140-90 2 seals 140 2 click rings DN 90 2 seals 90	2071 002

Flat channel system

		Part No.
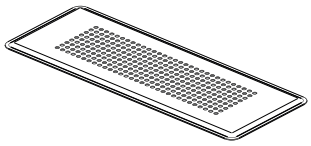	**Floor grille Inox** for floor exhaust flat 2 x 100 and 1 x 140 Dimensions: 350 x 130 mm	2070 930
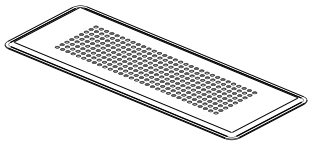	**Floor grill, white** for floor exhaust flat 2 x 100 and 1 x 140 Dimensions: 350 x 130 mm	2070 931
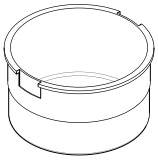	**Stopper 75** Sealing plug for sealing unnecessary connections to outlet 90° side 125 - 2 x 75	2070 932
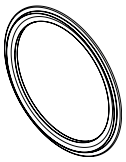	**Sealing ring for flexible pipe DN 75** in connection with click ring 75, for connection of flexible pipe FR-75 to outlet round 90° side 125-2 x 100 and base vertical flat to round 100-75	2070 994
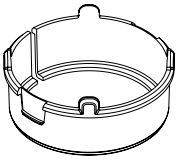	**Click ring DN 75** for outlet round 90° side 125-2 x 100 and flexible pipe FR-75 positive locking, detachable connection between flexible pipe and round connection	2070 996
	**Outlet round 90° lateral 125-2 x 75** made of plastic 2 x 75/125 mm Usable length 325 mm incl. 1x stopper 75	2070 997
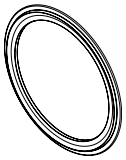	**Sealing ring for flexible pipe DN 90** in connection with click ring 90, for connection of flexible pipe FR-90 to outlet round 90° side 125-2 x 140	2070 998
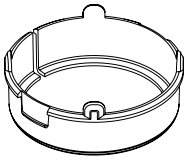	**Click ring DN90** for adapter flat to round 140 - 90 and and flexible pipe FR-90 positive locking, detachable connection between flexible pipe and round connection	2071 000

Distribution cases DN 150

Application:
Preferably concrete installation (mass concrete)

The **distribution case VKA** is used in combination with the **connection plate AP**.

- The connection plate AP is mounted in the ceiling, in the floor or in the wall (set in concrete).
- The distribution case VKA is then flanged directly on to the connection plate AP when the building shell is completed.

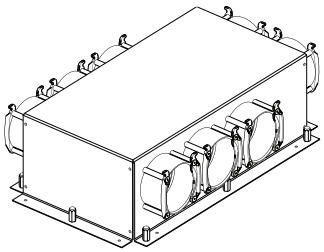

Connection plate AP to distribution case VKA
Casing of aluzinc sheet with x connection nozzles for flexible pipes Ø 75 mm.

Type	Connections	Part No.
AP-75x6	6	6012 359
AP-75x8	8	6012 360
AP-75x10	10	6012 361

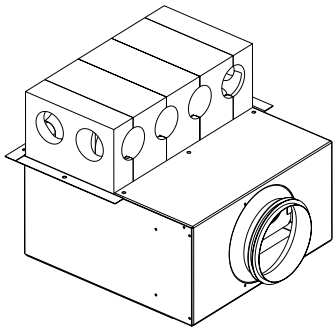

Distribution case VKA to connection plates AP
Casing of aluzinc sheet with 1 connection nozzle Ø 150 mm for the main duct and flange for connecting with the AP connection plate. PU sound absorption block inside with washable outer skin, access panel and baffles for adjusting the air flow for each flexible pipe Ø 75 mm.

Type	Connections	Part No.
VKA-150-75x6	6	6012 356
VKA-150-75x8	8	6012 357
VKA-150-75x10	10	6012 358

Distribution cases DN 150

		Part No.
	Application: **Preferably concrete installation (mass concrete)**	
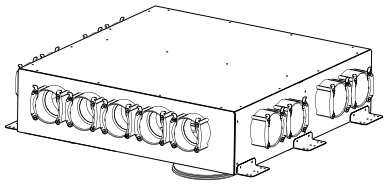 Access panel on bottom	**Distribution box VTB-150 9x75** Air distribution box from aluzinc sheet with access panel (can be painted on site). Interior lined with sound insulation material. Connection nozzle: 2x DN 150 (downward) ZUL 9x75 resp. ABL 9x75 Consisting of: Box, 6 connection brackets, 4 resp. 2 end caps, orifices for setting the air quantity per flex pipe DN 75.	6034 486
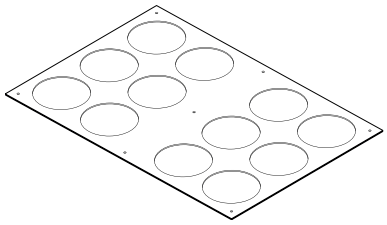	**Control damper RP 12 x 75** for flexible pipe DN 75 Template made from galvanised sheet steel, for flexible pipes DN 75	5037 864
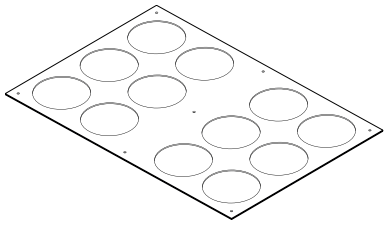	**Control damper RP 12 x 90** for flexible pipe DN 90 Template made from galvanised sheet steel, for flexible pipes	5042 170
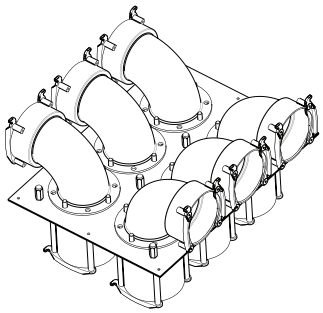	**Section distributor SV-6 x 75** for flexible pipe DN 75 for space-saving laying of 6 flexible pipes in the ceiling. Option of 6 x 90° bends or 3 straight connecting pieces. Each 90° elbow can be turned at 45° increments. 6 x DN 75 One section distributor required for each supply and exhaust air source.	6042 706
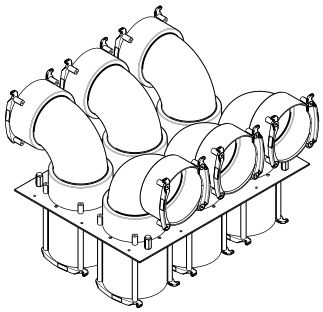	**Section distributor SV-6 x 90** for flexible pipes DN 90 for space-saving laying of 6 flexible pipes in the ceiling. Option of 6 x 90° bends or 3 straight connecting pieces. Each 90° elbow can be turned at 45° increments. 6 x DN 90 One section distributor required for each supply and exhaust air source	6044 775

Distribution cases DN 150

Application:
On-wall installation

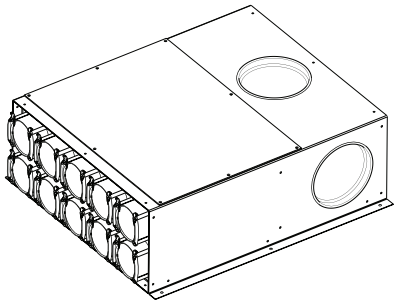

Distribution case VK
Casing of aluzinc sheet with 1 connection nozzle Ø 150 mm (included separately), can be mounted on the front, at the top or laterally on the left or on the right (on site) and x connection nozzles for flexible pipe Ø 75 mm. PU sound absorption block inside with washable outer skin and an access panel. Baffles for adjusting the air flow for each flexible pipe Ø 75 mm.

Type	Connections	Part No.
VK-150-75x6	6	6033 963
VK-150-75x8	8	6033 964
VK-150-75x10	10	6034 035

Distribution box VTB-150 14 x 75 1R — 6045 023
for concrete installation height 91 mm
Air distribution box from Aluzinc sheet without access panel.
Connection nozzles:
2 x DN 150 supply and extract air
supply air 7 x DN 75
(4 x front/3 x side)
extract air 7 x DN 75
(4 x front/3 x side)

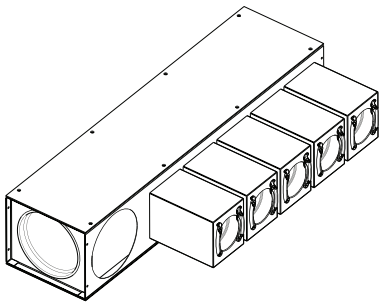

Storey distributor GVT-X
for connecting X flexible tubes Ø 75 mm. Casing of galvanised sheet steel with sound absorbing mat, connection possibilities Ø 150 mm, incl. 2 nozzles Ø 150 mm with double lip seal. Flexible installation possible due to access panel on both sides. Baffles for adjusting the air flow for each flexible pipe Ø 75 mm.

Type	Connections	Part No.
GVT-3	3	6027 743
GVT-4	4	6027 744
GVT-5	5	6027 745
GVT-6	6	6027 746

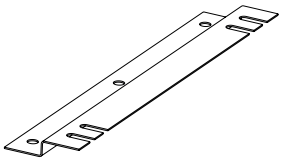

Mounting holder MH — 5032 853
for storey distributor GVT-X
from galvanised steel sheet
Length: 0.3 m
Two angle rails recommended per storey distributor.

Distribution cases DN 160

		Part No.
	Application: **Preferably concrete installation** **(mass concrete)**	
 Access panel on bottom	**In-wall distribution case** UPVK 160-75x6 Distribution case made of aluzinc sheet metal for cementing in. With a sliding connection piece DN 160 (to top or bottom) and 2 x 3 supports DN 75 (side), incl. 2 end covers, Inner lining of sound insulating material, Inspection sliding connection piece DN 180 Orifices for the setting the air volume per flexible pipe DN 75.	6051 581
 Access panel on bottom	**In-wall distribution case** UPVK 160-75x10 Distribution case made of aluzinc sheet metal for cementing in. With a sliding connection piece DN 160 (to top or bottom) and 2 x 5 supports DN 75 (side), incl. 4 end covers, Inner lining of sound insulating material, Inspection sliding connection piece DN 180 Orifices for the setting the air volume per flexible pipe DN 75.	6051 589
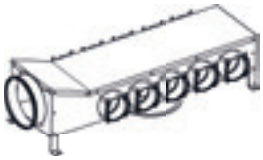 Access panel on bottom	**In-wall distribution case** UPVKS 160-75x10 Distribution case made of aluzinc sheet metal for cementing in. With a Connection pipe DN 160 (end face) and 2 x 5 connection pieces DN 75 (side) incl. 5 end caps, 1 collar DN 160, Inner lining of sound insulating material, Inspection sliding connection piece DN 180 Orifices for the setting the air volume per flexible pipe DN 75.	6051 671
 Access panel on bottom	**In-wall distribution case** UPVKS 160-90x10 Distribution case made of aluzinc sheet metal for cementing in. With a Connection pipe DN 160 (end face) and 2 x 5 connection pieces DN 90 (side) incl. 4 end caps, 1 collar DN 160, Inner lining of sound insulating material, Inspection sliding connection piece DN 180 Orifices for the setting the air volume per flexible pipe DN 90.	6051 626

Distribution cases DN 180

Part No.

Application:
On-wall installation

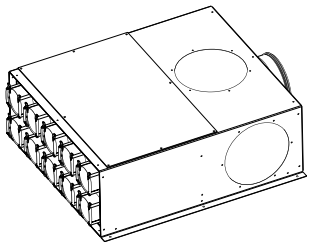

Distribution case VK
Casing of aluzinc sheet with 1 connection nozzle Ø 180 mm (supplied loose), on end, top or left-side mounting (on site) and x connection nozzles for flex pipes Ø 75 resp. 90 mm. PU sound absorption block inside with washable outer skin and an access panel. orifices for setting the air quantity per flex pipe Ø 75 resp. 90 mm.

Type	Connections	
VK-180-75x6	6	6036 603
VK-180-75x8	8	6031 881
VK-180-75x10	10	6035 673
VK-180-75x12	12	6035 674
VK-180-90x6	6	6036 143
VK-180-90x8	8	6031 880
VK-180-90x10	10	6035 675
VK-180-90x12	12	6035 711

Distribution cases DN 200

Application:
Preferably concrete installation
(mass concrete)

Access panel on bottom

In-wall distribution case 6051 623
UPVK 200-90x10
Distribution case made of aluzinc sheet metal for cementing in. With a sliding connection piece DN 200 (to top or bottom) and 2 x 6 supports DN 90 (side), incl. 6 end covers,
Inner lining of sound insulating material,
Inspection sliding connection piece DN 180
Orifices for the setting the air volume per flexible pipe DN 90.

Application:
On-wall installation

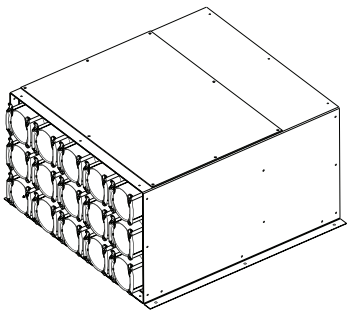

Distribution case VK200-75x15 6030 966
Air distribution case of aluzinc sheet with access panel.
Inside with sound absorption block.
Connection nozzles:
1 x DN 200 (on the back)
15 x (3x5) DN 75 (on the front)
Consisting of: distribution case, baffles for adjusting the air flow for each flexible pipe DN 75.

		Part No.
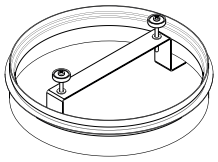	**Access panel ø180 for UPV** from galvanised sheet incl. 2 magnets	5041 681
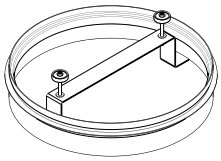	**Access panel ø200 for UPV** made from galvanised sheet metal incl. 2 magnets	5041 682
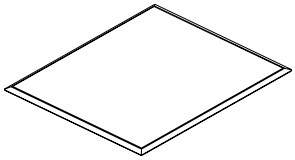	**Design cover 220x220** suitable for access panel ø180 white RAL 9016	5041 683
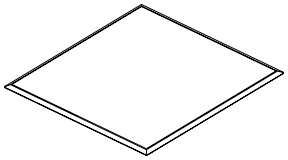	**Design cover 240x240** suitable for access panel ø200 white RAL 9016	5041 684
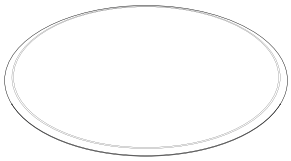	**Design cover ø220** suitable for access panel ø180 white RAL 9016	5041 685
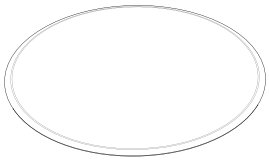	**Design cover ø240** suitable for access panel ø200 white RAL 9016	5041 686

Distribution case accessories

		Part No.
	**Control damper RK-80** for flexible pipe DN 75 sealing control damper for adjustment of the air flow. Of galvanised sheet steel DN 80	6013 654
	**Air flow rate control valve DN 90** for connection housing AG-90, quick 90, floor passage BD-30-90 and flush-mounted connection box UPK-90	2070 534
	**End cover quick 75** Cover for unused connections DN 75	5043 525
	**End cover quick 90** Cover for unused connections DN 90	5043 522

Air grilles - floor

Application:
In the floor structure (finished floor, only supply air)

	**Floor grille BD-30-75** perforated grille made from stainless steel in an adjustable casing Inner component of stainless steel with 3 contact points Outer component of aluzinc sheet with 2 fastening catches and one connection nozzle for flexible pipe DN 75 Supply air up to 30 m^3/h Height: 130 to 180 mm	6015 304
	**Floor grille BD-30-90** perforated grille made from stainless steel in an adjustable casing. Inner component of stainless steel with 3 contact points, outer component of Al/Zn sheet with 2 fastening catches and one connection nozzle for flexible pipe DN 90. Supply air up to 40 m^3/h Height: 130 to 180 mm	6022 513

Air grilles - wall/ceiling

	Part No.
Application: **Mass concrete, masonry walls and light-weight walls**	
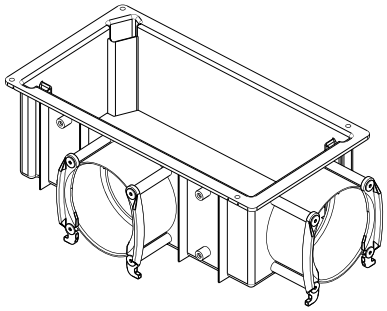 **Connection housing AG-60** for supply and extract air in combination with design grilles. Casing allows precise grille alignment (swivelling) after mounting. Plastic casing with 2 connection nozzles DN 75, fastening bracket, end cover, sound insulating mat and insert block as building protection cover and plastering aid. Supply air: 1 x DN 75 up to 30 m³/h 2 x DN 75 for 40 m³/h Exhaust air: 1 x DN 75 up to 30 m³/h 2 x DN 75 up to 60 m³/h For installation in solid concrete, masonry and plasterboard walls.	6034 355
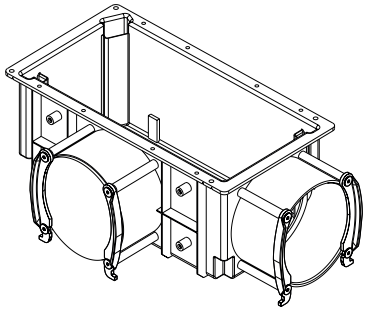 **Connection housing AG-90** for supply and extract air in combination with design grilles. Casing allows precise grille alignment (swivelling) after mounting. Plastic casing with 2 connection nozzles DN 90, fastening bracket, end cover, sound insulating mat and insert block as building protection cover and plastering aid. Supply air: 1 x DN 90 up to 40 m³/h Exhaust air: 1 x DN 90 up to 60 m³/h For installation in solid concrete, masonry and plasterboard walls.	6034 357
Application: **Mass concrete**	
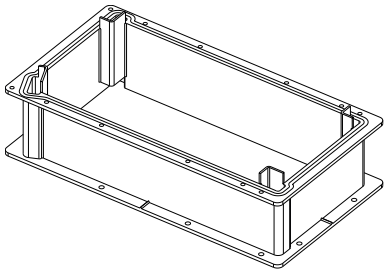 **Extension VAG-60/90** for connection housing AG-60 and AG-90 for raising above the lower reinforcement for solid concrete ceilings. Raising height: 60 mm Extension permits precise grille alignment after installation.	6034 360
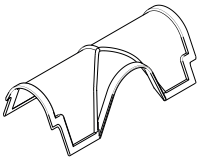 **Extract air filter AGF-60/90** for connection housing AG-60 and AG-90 of cleanable, fine-mesh polyamide net with plastic frame. Cannot be combined with sound insulation insert.	5033 121
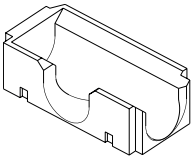 **Sound insulation insert 60/90** for connection housing AG-60 and AG-90 retrofittable sound insulation insert for acoustically sensitive rooms. Cannot be combined with extract air filter AGF-60/90.	6034 398

Air grilles - wall/ceiling

		Part No.
	Application: **mass concrete, filigree blankets**	
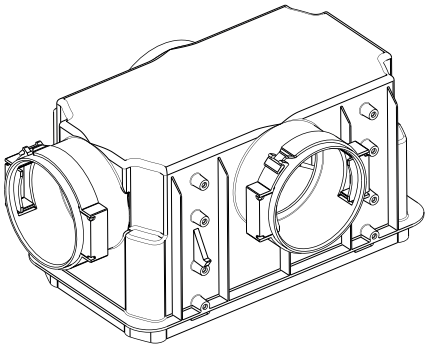	**Connection housing quick 75** for supply and extract air in combination with design grilles. Housing allows precise alignment of grilles after mounting. Plastic housing with 2 connection nozzles DN 75. Very easy to mount, no nails in concrete after stripping. Supply air: 1 x DN 75 up to 30 m^3/h 2 x DN 75 up to 40 m^3/h Extract air: 1 x DN 75 up to 30 m^3/h 2 x DN 75 up to 60 m^3/h Suitable for installation in solid concrete	6046 302
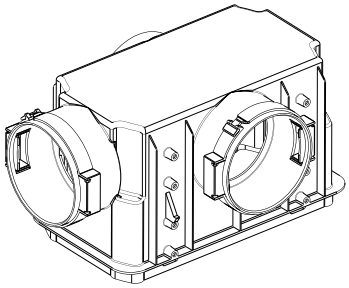	**Connection housing quick 90** for supply and extract air in combination with design grilles. Housing allows precise alignment of grilles after mounting. Plastic housing with 2 connection nozzles DN 90. Very easy to mount, no nails in concrete after stripping. Supply air: 1 x DN 90 up to 40 m^3/h Extract air: 1 x DN 90 up to 60 m^3/h Suitable for installation in solid concrete	6046 296
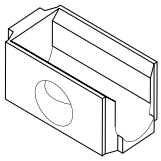	**Sound insulation insert quick** for connection housing quick retrofittable sound insulation insert for acoustically sensitive rooms. Not combinable with extract airfilter quick	6047 831
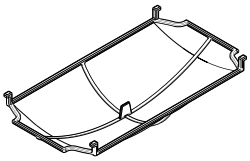	**Extract air filter quick** for connection housing quick of cleanable, fine-mesh polyamide net with plastic frame. Cannot combine w/sound insulation insert	5045 011
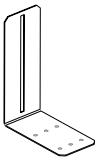	**Mounting kit quick** Mounting help for connection housing quick with 4 mounting brackets and 8 screws	6048 808

Air grilles - wall/ceiling

	Plastic supply air/extract air grille	Part No.
	The alignment of the grilles can be slightly corrected after installation.	
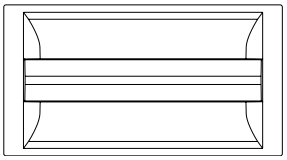	**Design grille Pazifik** for connection housing AG-60, AG-90 and quick 75/90 made of plastic, with plug connection, white (RAL 9016) stove-enamelled, Suited for: supply air up to 40 m³/h extract air up to 60 m³/h	6046 743
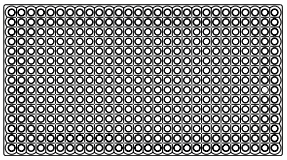	**Design grille Adria** for connection housing AG-60, AG-90 and quick 75/90 made of plastic, with plug connection, white (RAL 9016) stove-enamelled, Suited for: supply air up to 40 m³/h extract air up to 60 m³/h	6046 744
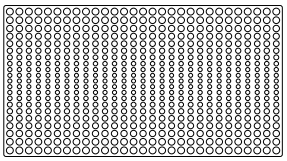	**Design grille Atlantik** for connection housing AG-60, AG-90 and quick 75/90 made of plastic, with plug connection, white (RAL 9016) stove-enamelled, Suited for: supply air up to 40 m³/h extract air up to 60 m³/h	6046 745
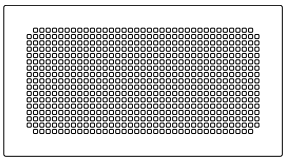	**Design grille Karibik** for connection housing AG-60, AG-90 and quick 75/90 made of plastic, with plug connection, white (RAL 9016), painting on site, Suitable for: supply air up to 40 m³/h extract air up to 60 m³/h	6047 228

Air grilles - wall/ceiling

Metal supply air/extract air grille

The alignment of the grilles can be slightly corrected after installation.

		Part No.
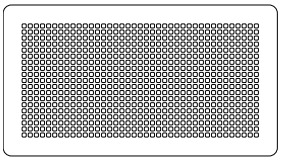	**Design grille Pizol** for connection housing AG-60, AG-90 and quick 75/90 of brushed stainless steel, with plug connection, Suited for: supply air up to 40 m³/h extract air up to 60 m³/h	6046 696
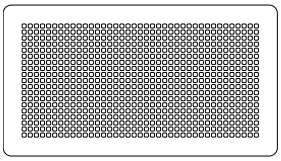	**Design grille Pizol** for connection housing AG-60, AG-90 and quick 75/90 of sheet steel, with plug connection, white (RAL 9016) stove-enamelled, Suited for: supply air up to 40 m³/h extract air up 60 m³/h	6046 698
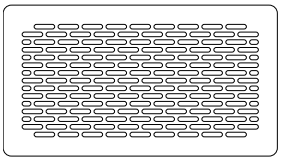	**Design grille Alvier** for connection housing AG-60, AG-90 and quick 75/90 of brushed stainless steel, with plug connection, Suited for: supply air up to 40 m³/h extract air up to 60 m³/h	6046 700
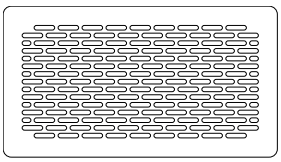	**Design grille Alvier** for connection housing AG-60, AG-90 and quick 75/90 of sheet steel, with plug connection, white (RAL 9016) stove-enamelled, Suited for: supply air up to 40 m³/h extract air up to 60 m³/h	6046 702
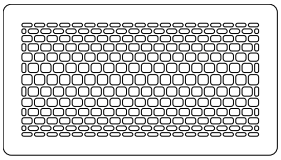	**Design grille Säntis** for connection housing AG-60, AG-90 and quick 75/90 of brushed stainless steel, with plug connection, Suited for: supply air up to 40 m³/h extract air up to 60 m³/h	6046 724
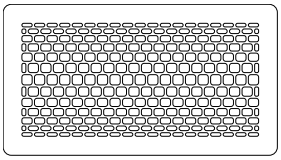	**Design grille Säntis** for connection housing AG-60, AG-90 and quick 75/90 of sheet steel, with plug connection, white (RAL 9016) stove-enamelled, Suited for: supply air up to 40 m³/h extract air up to 60 m³/h	6046 726

Air grilles - wall/ceiling

	Part No.
Application: **Mass concrete, masonry walls, light-weight construction**	
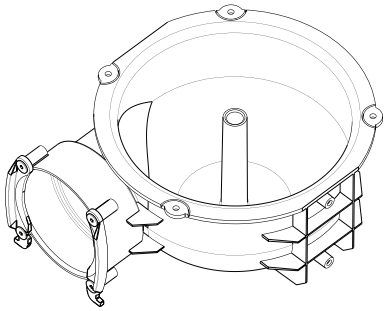 **Tangential casing TG-30** for supply and extract air in combination with tangential design grille. Casing of plastic with connection nozzle DN 75, fixing angles and building protection cover. Supply air: 1 x DN 75 up to 30 m³/h Extract air: 1 x DN 75 up to 30 m³/h	6023 060
Connection casing accessories	
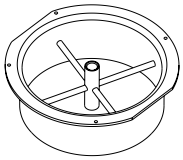 **Tangential extension TGA** for tangential casing TG-30 for connecting design grille for connection extension which is required for lightweight walls and filigree concrete.	6022 965
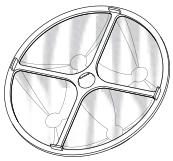 **Extract air filter ATG-30** for tangential casing TG-30 and tangential extension TGA of cleanable, fine-mesh polyamide net with plastic frame.	5020 632
Grilles - supply air/extract air	
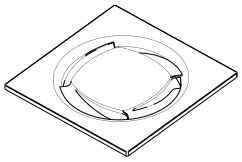 **Tangential passage angular** for tangential casing and tangential extension, of plastic, with plug connection, white (RAL 9016), painting on site, Suited for: supply air up to 30 m³/h extract air up to 30 m³/h	6046 837
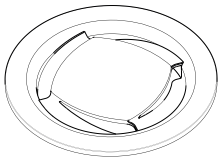 **Tangential passage round** for tangential casing and tangential extension, of plastic, with plug connection, white (RAL 9016), painting on site, Suited for: supply air up to 30 m³/h extract air up to 30 m³/h	6046 838

Connection cylinder

		Part No.
	**Connection cylinder quick 90 short** for masonry, lightweight and wood construction Plastic casing, with connection DN90 Supply air: 1 x DN 90 up to 40 m³/h Extract air: 1 x DN 90 up to 60 m³/h	6050 377
	**Connection cylinder quick 75 short** **For supply and extract air** for masonry, lightweight and wood construction Plastic casing, two connections DN 75 incl. 1 stopper DN 75 Supply air: 1 x DN 75 up to 30 m³/h 2 x DN 75 up to 40 m³/h With tangential outlet only 1 x DN 75 Extract air: 1 x DN 75 up to 30 m³/h 2 x DN 75 up to 60 m³/h	6050 374
	**Connection cylinder quick 75 medium** for element ceiling up to 60 mm, solid concrete Plastic casing, two connections DN 75 incl. 1 stopper DN 75 Supply air: 1 x DN 75 up to 30 m³/h 2 x DN 75 up to 40 m³/h With tangential outlet only 1 x DN 75 Extract air: 1 x DN 75 up to 30 m³/h 2 x DN 75 up to 60 m³/h	6050 375
	**Connection cylinder quick 90 medium** for element ceiling up to 60 mm, solid concrete Plastic casing, with connection DN90 Supply air: 1 x DN 90 up to 40 m³/h Extract air: 1 x DN 90 up to 60 m³/h	6050 378

		Part No.
Design grille		
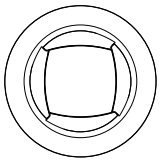	**Design grille Tangential 125** matching: Connection cylinder quick 75 + quick 90 made of plastic, with support for connection cylinder quick 75 + quick 90 Colour: RAL 9016, can be painted on site Supply air up to 30 m³/h Extract air up to 30 m³/h	6052 158
	**Design grille Falknis painted white** matching Connection cylinder quick 75 + quick 90 Steel, painted white (RAL 9016) With support for connection cylinder quick 75 + quick 90 Supply air up to 30 m³/h Extract air up to 30 m³/h	6052 162
	**Stainless steel design grille Falknis** matching Connection cylinder quick 75 + quick 90 Brushed stainless steel With support for connection cylinder quick 75 + quick 90 Supply air up to 30 m³/h Extract air up to 30 m³/h	6051 847
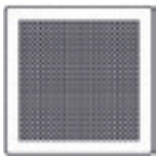	**Design grille Calanda painted white** matching Connection cylinder quick 75 + quick 90 Steel, painted white (RAL 9016) With support for connection cylinder quick 75 + quick 90 Supply air up to 30 m³/h Extract air up to 30 m³/h	6052 161
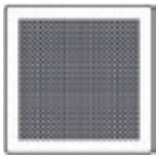	**Stainless steel design grille Calanda** matching Connection cylinder quick 75 + quick 90 Brushed stainless steel With support for connection cylinder quick 75 + quick 90 Supply air up to 30 m³/h Extract air up to 30 m³/h	6051 849
Design grille		
	**Extract air filter 125** for connection cylinder quick of cleanable, fine-mesh polyamide net with plastic frame.	5049 629

	Part No.
Supply air/extract air Disc valve	
 **Disc valve supply air TVZ-125** for connection cylinder quick of sheet steel (white RAL 9016) with installation frame DN 125, height: 45 mm supply air up to 40 m³/h	2056 417
 **Disc valve extract air TVA-125** for connection cylinder quick of sheet steel (white RAL 9016) with installation frame DN 125, height: 45 mm extract air up to 60 m³/h	2056 416
 **Spigot DN 125** for connection cylinder quick of galvanised sheet steel DN 125, height: 40 mm	2024 180
Grilles - supply air/extract air	
Application: **Concrete installation (in-situ concrete)**	
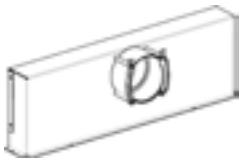 **Connection box SD-75** for encasing in concrete, made of galvanised sheet steel with 1 nozzle 75 mm Air quantity up to 30 m³/h	6022 617
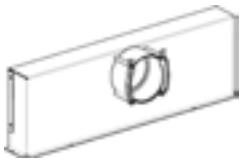 **Connection box SD-90** for encasing in concrete, made of galvanised sheet steel with 1 nozzle 90 mm Air quantity up to 40 m³/h	6022 543
 **Design slit grille 500 mm** suitable for connection box	2037 000

Dimensions

HomeVent® standard operator terminal BG02 E on-wall

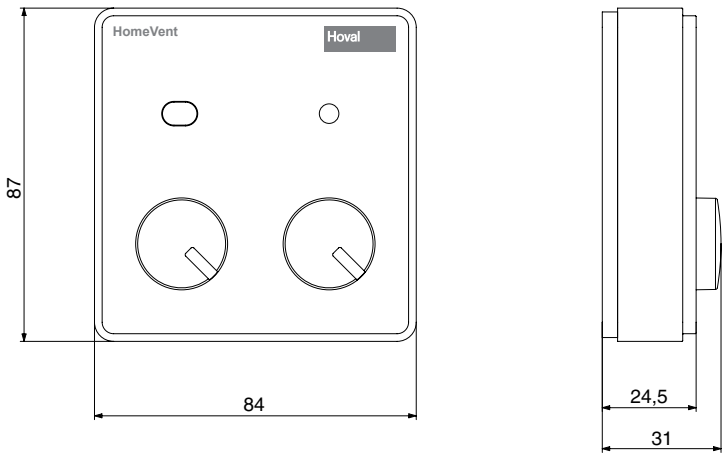

Operator terminals BG02 E

Connection for RJ 45 plug
CAT5 patch (8-pin) connection cable
(parallel, not crossed)

Electrical connection	
• Voltage (DC)	24 V
Type of protection	IP 20
Application limits 3K3 as per EN 50090-2-2, residential rooms, office	
• Temperature range	15…40 °C
• Humidity range	5…85 % r.h.

TopTronic® E
Room control module comfort plus

- Connection to the Hoval bus system via RJ45 plug connection or plug terminals (max. 0.75 mm²)
- Resolution: 480 x 320
- Voltage: 12 V DC 100 mA
- Humidity (in operation): 20...80 %, non-condensing

Dimensions

(Dimensions in mm)

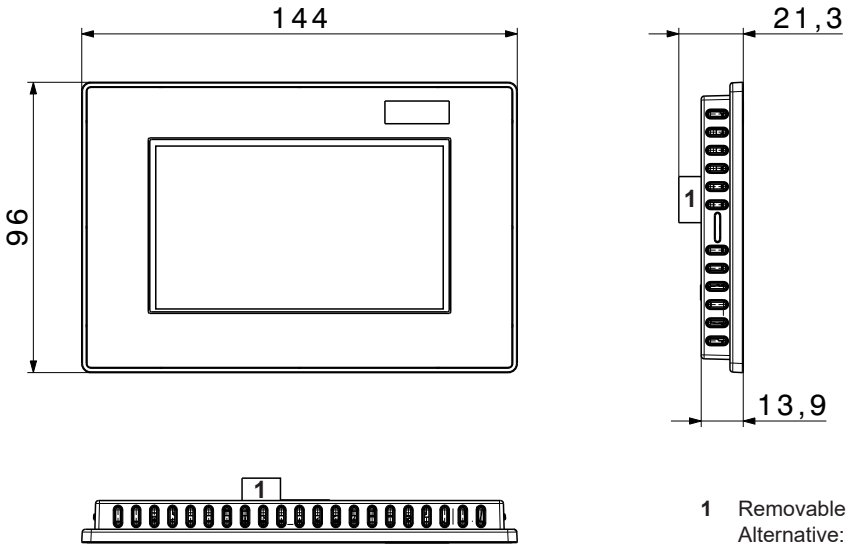

1 Removable RJ45 plug connection
Alternative: plug terminal (max. 0.75 mm²)

Wall mounting with surface-mounting frame
(On-wall mounted frame is included in the scope of delivery)

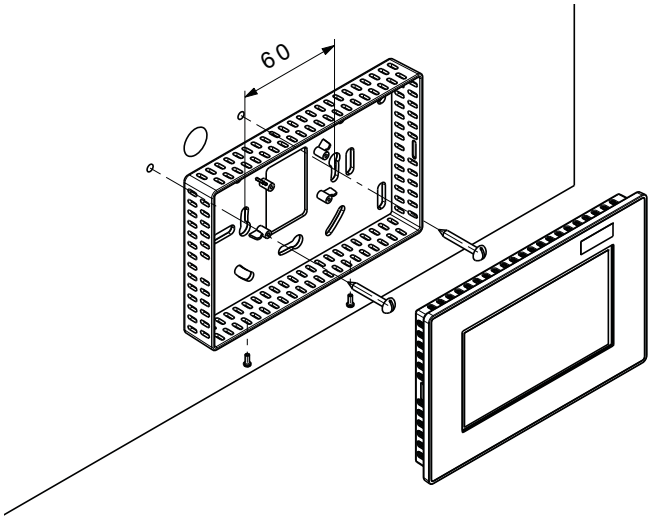

Wall mounting with wall mounting plate
with concealed sockets
(Wall-mounting plate is included in the scope of delivery)

- Connection to the Hoval bus system via RJ45 plug connection or plug terminals (max. 0.75 mm²)

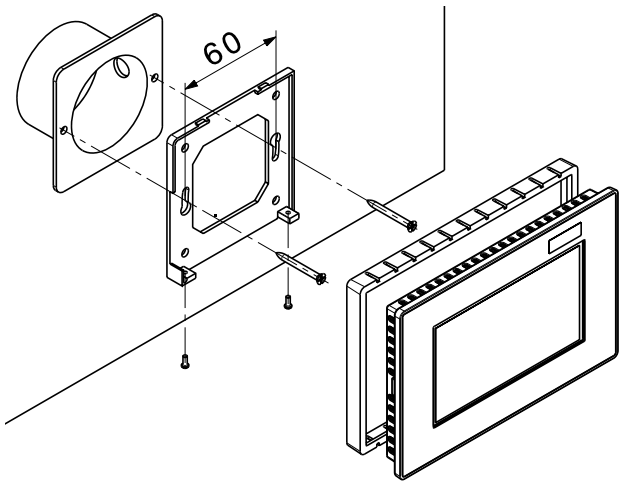

Pipe system DN 150
The pipe system consists of galvanised steel with double lip seal.
Pipe as per DIN 24145; 0.6 mm thick.

Volume flow [m³/h]	[Pa/m] Pipe	Pressure drop [Pa] 90° elbow	[Pa] 45° elbow
100	0.3	0.7	0.5
150	0.6	1.5	1.0
200	1.0	2.5	1.5
250	1.5	4.0	2.0

Pipe system DN 160
The pipe system consists of galvanised steel with double lip seal.
Pipe as per DIN 24145; 0.6 mm thick.

Volume flow [m³/h]	[Pa/m] Pipe	Pressure drop [Pa] 90° elbow	[Pa] 45° elbow
150	0.5	1.3	0.8
200	0.8	2.0	1.2
250	1.2	2.5	1.5
350	1.8	5.0	1.8

Pipe system DN 180
The pipe system consists of galvanised steel with double lip seal.
Pipe as per DIN 24145; 0.6 mm thick.

Volume flow [m³/h]	[Pa/m] Pipe	Pressure drop [Pa] 90° elbow	[Pa] 45° elbow
150	0.4	0.8	0.5
250	0.6	2.0	1.0
350	1.0	4.0	2.0

Pipe system DN 200
The pipe system consists of galvanised steel with double lip seal.
Pipe as per DIN 24145; 0.6 mm thick.

Volume flow [m³/h]	[Pa/m] Pipe	Pressure drop [Pa] 90° elbow	[Pa] 45° elbow
150	0.3	0.7	0.5
350	0.7	1.6	1.0
500	1.5	4.0	2.0

Thermal insulation for main duct DN 150
The insulation consists of synthetic rubber (closed-cell EPDM with resistant outside skin), insulation thickness 25 mm, black.
Thermal conductance λ at 0 °C is 0.032 W/mK
Steam diffusion resistance ≥ 7000
Fire class 5.3 or B1

Thermal insulation tube: for spiral-seam tube DN 150 mm, case contains 3 tubes, each with a length of 2 m

Thermal insulation for pipe elbow: Thermal insulation mat cut to length for pipe elbow (2-part) suitable for DN 150 and DN 160

Pipe clamp with thermal insulation sleeve: For installation of pipes without thermal bridges

Adhesive: ready-to-use adhesive with brush 0.25 l

Adhesive tape: of synthetic rubber, 50 mm wide, 15-meter roll

Attention:
Comply with regional regulations on thermal insulation.

IsiPipe pipe system EPP
Pipeline consists of diffusion-tight EPP,
Wall thickness (d): 15 mm, grey
Thermal conductance: λ = 0.037 W/mK

IsiPipe pipe system EPP-150
(Dimensions in mm)

IsiPipe pipeline EPP-150-500/1000

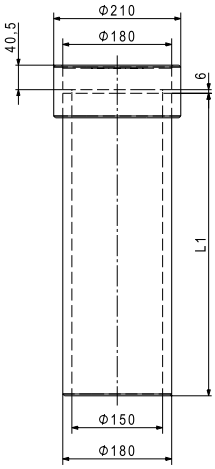

Pipe	d	L1
150	15	500
150	15	1000

IsiPipe pipe bend EPP-150-45

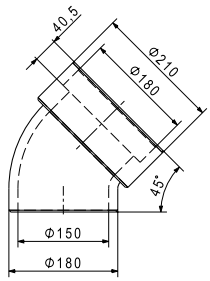

IsiPipe pipe bend EPP-150-90

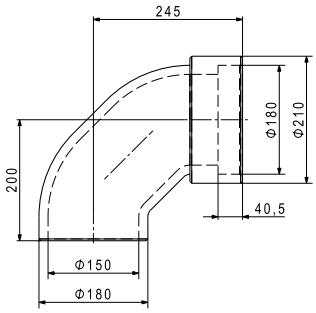

IsiPipe sleeve EPP-150

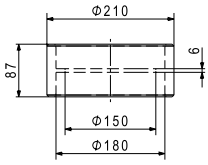

IsiPipe pipe system EPP-160
(Dimensions in mm)

IsiPipe pipeline EPP-160-1000

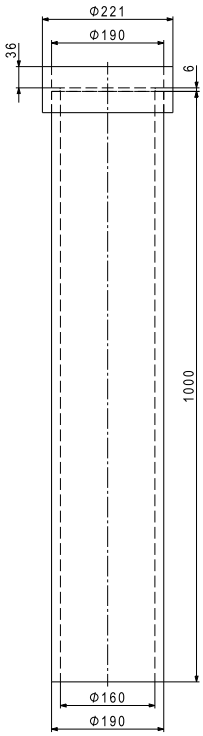

Pipe	d	L1
160	15	1000

IsiPipe pipe bend EPP-160-45

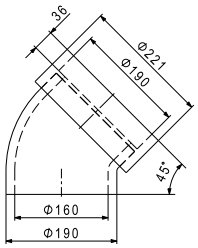

IsiPipe pipe bend EPP-160-90

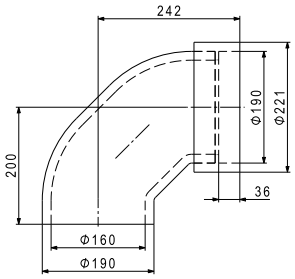

IsiPipe sleeve EPP-160

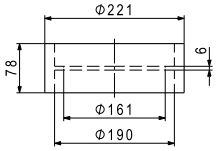

IsiPipe device adapter EPP-160

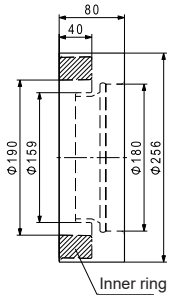

IsiPipe Plus pipe system EPP
Pipeline consists of diffusion-tight EPP,
Wall thickness (d): 43 mm, black
Thermal conductance: λ = 0.035 W/mK

IsiPipe Plus pipe system EPP-160/200
(Dimensions in mm)

IsiPipe Plus pipeline EPP-160/1000
IsiPipe Plus pipeline EPP-200/1000

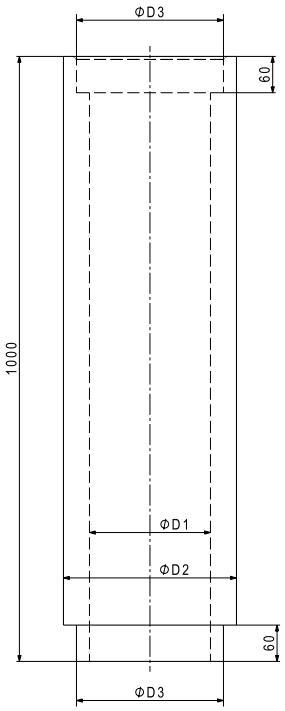

IsiPipe Plus pipe bend EPP-160/45
IsiPipe Plus pipe bend EPP-200/45

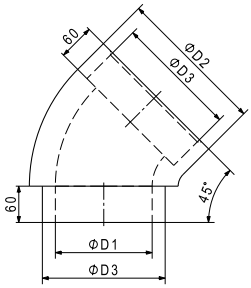

IsiPipe Plus pipe bend EPP-160/45 2x
IsiPipe Plus pipe bend EPP-200/45 2x

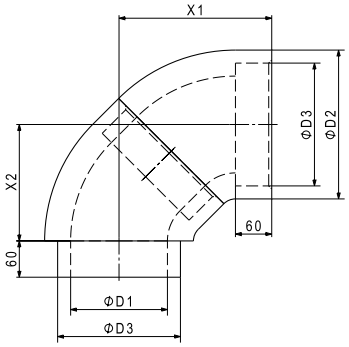

IsiPipe Plus sleeve EPP-160
IsiPipe Plus sleeve EPP-200

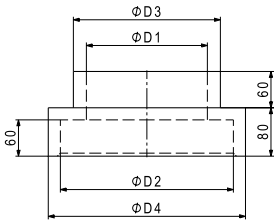

D1 Pipe	d	D2	D3
160	43	246	203
200	43	286	243

D1 Bend 45°	d	D2	D3
160	43	246	203
200	43	286	243

D1 Bend 90°	d	D2	D3	X1	X2
160	43	246	203	252	192
200	43	286	243	272	212

D1 Sleeve	d	D2	D3	D4
160	43	246	203	286
200	43	286	243	326

IsiPipe Plus eccentric adapter EPP
(Dimensions in mm)

IsiPipe Plus eccentric adapter EPP-150-160
IsiPipe Plus eccentric adapter EPP-160-160
IsiPipe Plus eccentric adapter EPP-180-200

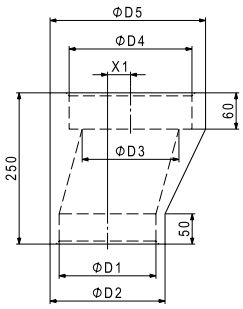

D1	d	D2	D3	D4	D5	X1
150/160	43	180	160	203	257	38
160/160	43	190	160	203	257	38
180/200	43	210	200	243	290	48

IsiPipe Plus device adapter EPP-160

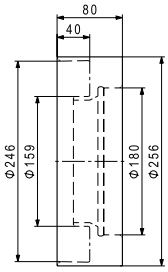

Komfort Plus CB-150-3
for tubing DN 150 (Supply air duct)
guarantees a supply air temperature of 17°C at an outside temperature below -15°C. Equipped with overheating protection.
On site: flow monitor
Pipe connection: DN 150
Heat output up to a maximum of 600 W.
Weight: 3.2 kg
Not suitable for IsiPipe pipeline.

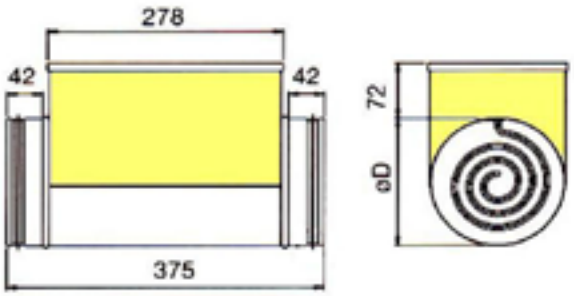

Cowl HA-250
for spiral-seam tube DN 150
for outside and exhaust air
of galvanised sheet steel
Installation position: vertical

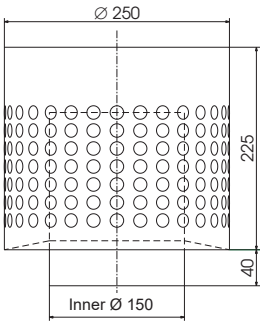

Volume flow [m³/h]	Pressure drop Outside air [Pa]	Pressure drop Exhaust air [Pa]
150	10	5
200	18	9
250	28	15

Weatherproof grille WG-150
for spiral-seam tube DN 150
for outside and exhaust air
of aluminium with rain lug, can be painted
with double lip seal,
pipe nozzle DN 150

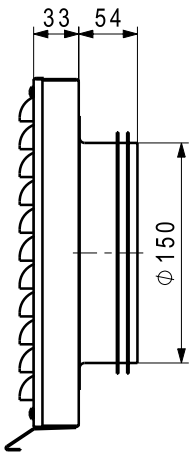

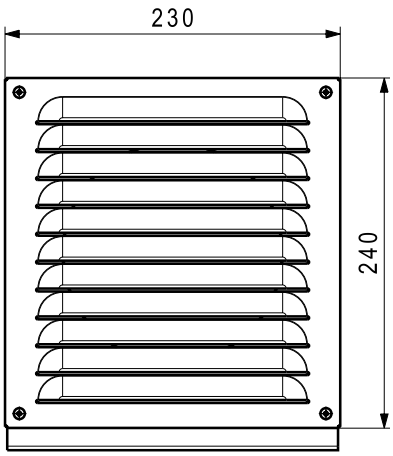

Volume flow [m³/h]	Pressure drop Outside air [Pa]	Pressure drop Exhaust air [Pa]
150	7	7
200	12	15
250	18	24

Silencer SD-150-500
The silencer consists of a rectangular casing of galvanised steel with connection nozzles on both sides. The housing is lined on the inside with highly effective sound absorbing material. The unit can be cleaned through the pipe nozzle.

Frequency [Hz]	125	250	500	1000	2000	4000	8000
Damping [dB]	6	10	19	23	32	25	16

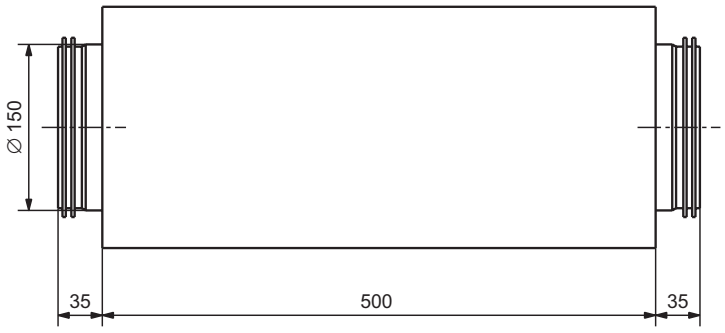

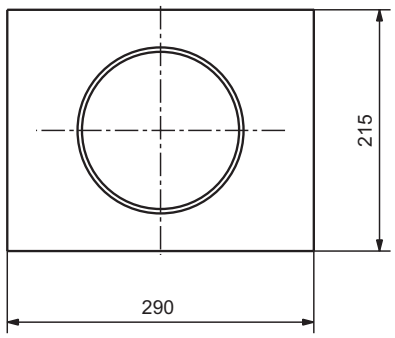

Outside air intake set AAS-150
for spiral-seam tube DN 150,
galvanic isolation of the connection
for outside and exhaust air
of stainless steel, lamella cowl,
consisting of:
1 cowl DN 150,
1 pipe DN 150, length: 0.5 m,
2 pipes DN 150, length: 1 m and
2 wall mountings

Volume flow [m³/h]	Pressure drop of cowl [Pa]
100	3
150	5
200	8
250	12

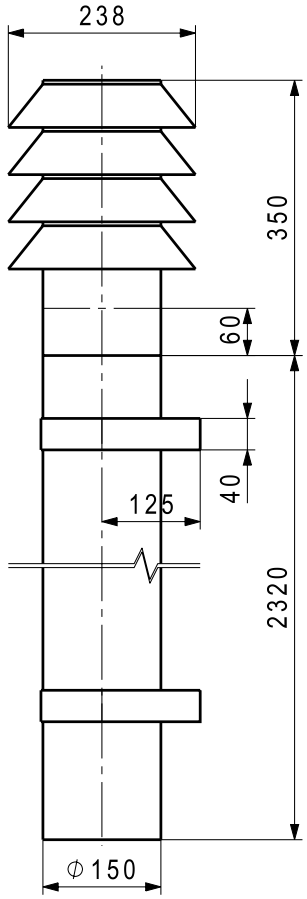

Exhaust air nozzle FST
for spiral-seam tube DN 150
of galvanised sheet steel
with bird protection grille DN 150
for horizontal installation

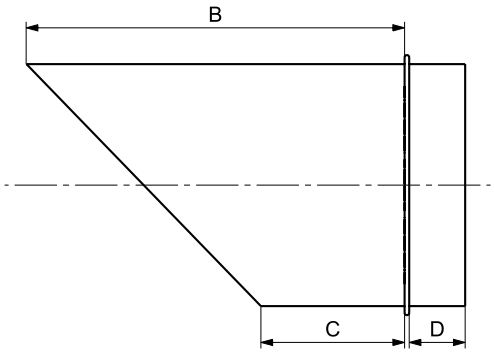

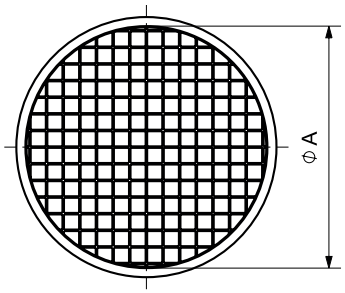

	A	B	C	D
FST-150	150	190	40	45
FST-160	160	250	95	37
FST-180	180	270	90	45
FST-200	200	245	45	45

Wall outlet Ø160 left

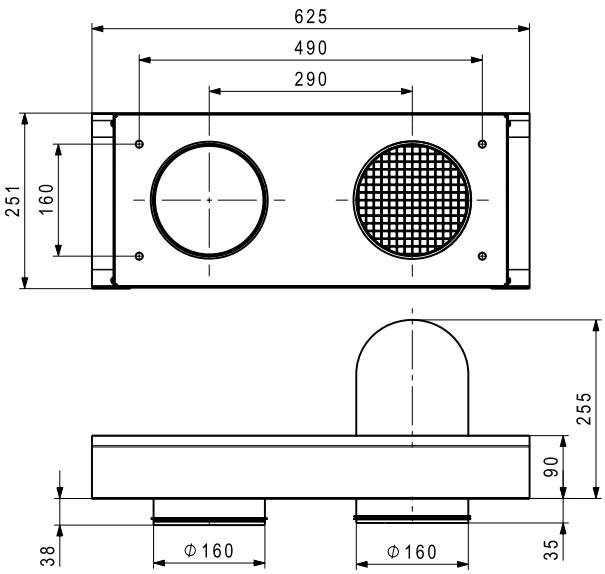

Wall outlet Ø160 right

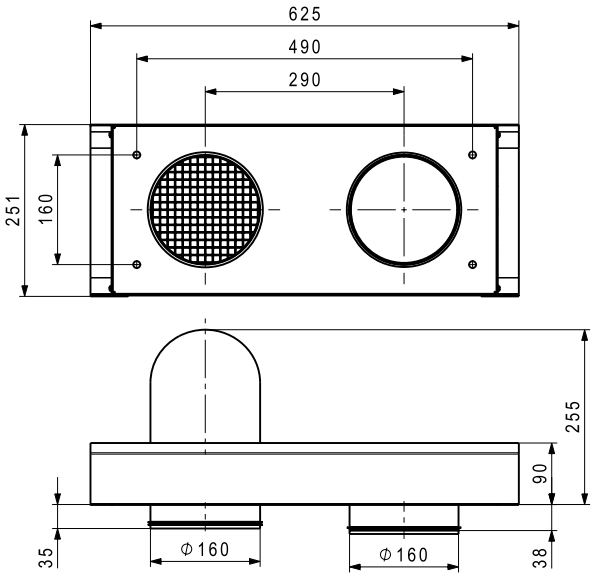

Plywood
for wall outlet, Ø160

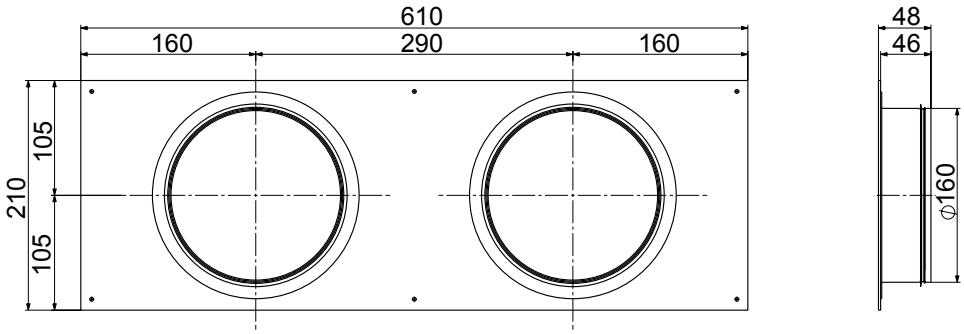

Weatherproof grille WG-160
for spiral-seam tube DN 160
for outside and exhaust air
of aluminium with rain lug, can be painted
with double lip seal,
pipe nozzle DN 160

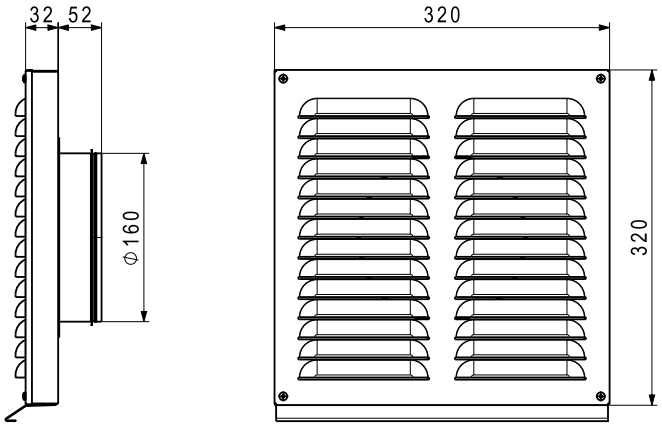

Volume flow [m³/h]	Pressure drop Outside air [Pa]	Pressure drop Exhaust air [Pa]
150	7	7
200	12	15
250	18	24

Silencer SD-160-500
The silencer consists of a rectangular casing of galvanised steel with connection nozzles on both sides. The housing is lined on the inside with highly effective sound absorbing material. The unit can be cleaned through the pipe nozzle.

Frequency [Hz]	125	250	500	1000	2000	4000	8000
Simple damping [dB]	6	10	19	23	32	25	16

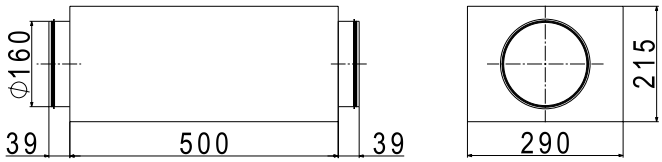

Weatherproof grille WG-180
for spiral-seam tube DN 180
for outside and exhaust air
of aluminium with rain lug, can be painted
with double lip seal,
pipe nozzle DN 180

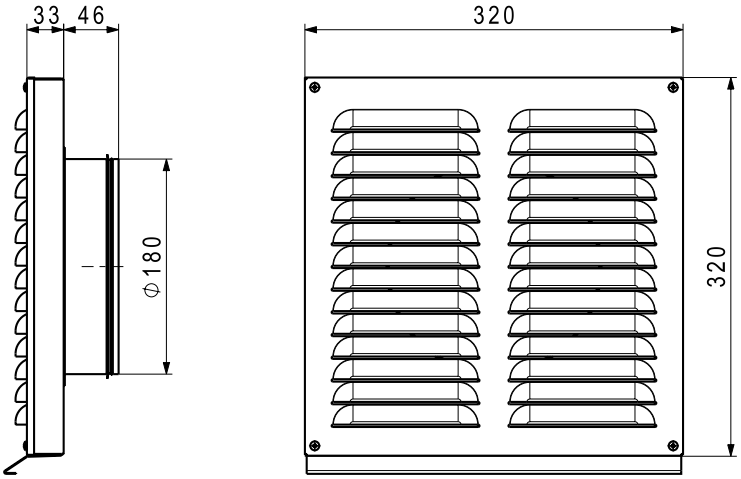

Volume flow [m³/h]	Pressure drop [Pa]
150	6
250	9
350	13

Silencer FSR-180-750
The silencer consists of a rectangular casing of galvanised steel with connection nozzles on both sides. The housing is lined on the inside with highly effective sound absorbing material. The unit can be cleaned through the pipe nozzle.

Frequency [Hz]	125	250	500	1000	2000	4000	8000
Simple damping [dB]	4	11	12	12	12	7	3

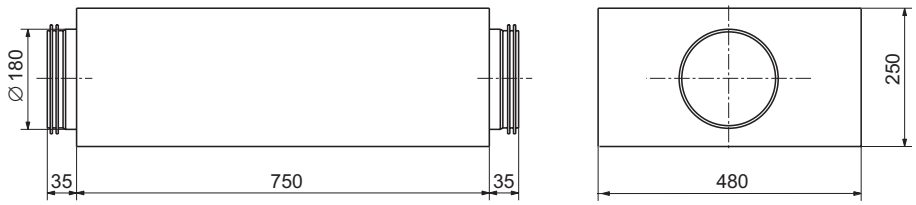

Silencer FLSDA-180-1000
The silencer consists of a flexible aluminium envelope tube, inside from perforated aluminium tube with connection nozzles on both sides with double lip seal.

Frequency [Hz]	125	250	500	1000	2000	4000	8000
Simple damping [dB]	5	13	30	42	34	24	13

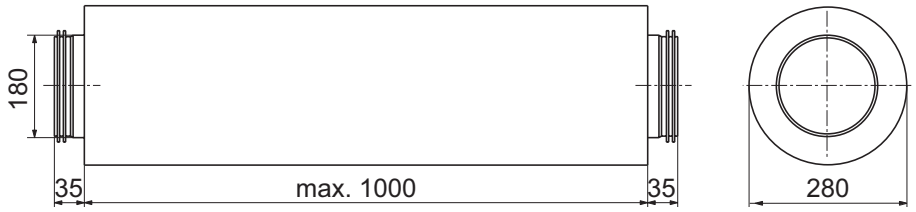

Stainless steel cowl AAS-180
for spiral-seam tube DN 180
galvanic isolation of the connection
for outside and exhaust air
of stainless steel, lamella cowl,
consisting of:
1 cowl DN 180,
1 pipe DN 180, length: 0.5 m,
2 pipes DN 180, length: 1 m and
2 wall mountings

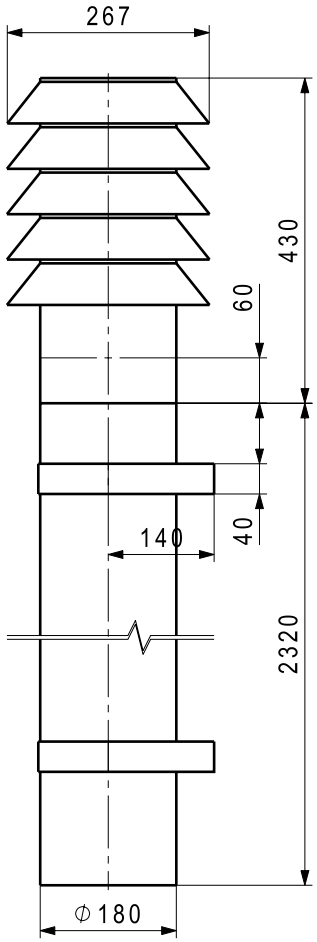

Weatherproof grille WG-200
for spiral-seam tube DN 200
for outside and exhaust air
of aluminium with rain lug, can be painted
with double lip seal,
pipe nozzle DN 200

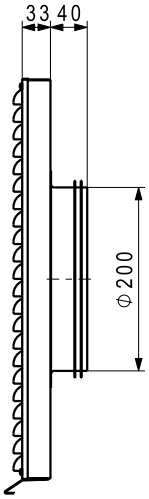

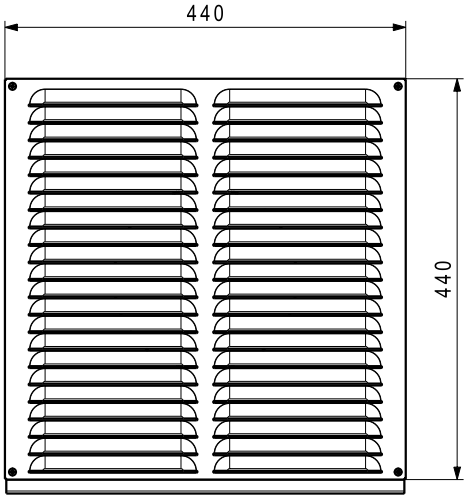

Volume flow [m³/h]	Pressure drop [Pa]
150	4
350	8
500	12

Silencer SD-200-1000
The silencer consists of a round casing of galvanised steel with connection nozzles on both sides. The housing is lined on the inside with highly effective sound absorbing material. The unit can be cleaned through the pipe nozzle.

Frequency [Hz]	125	250	500	1000	2000	4000	8000
Damping [dB]	5	15	26	26	19	10	5

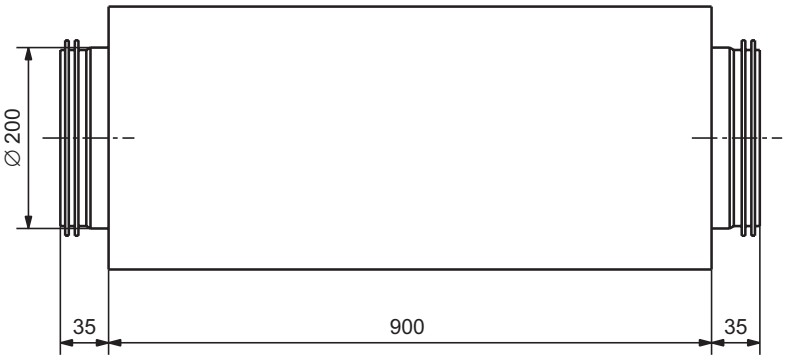

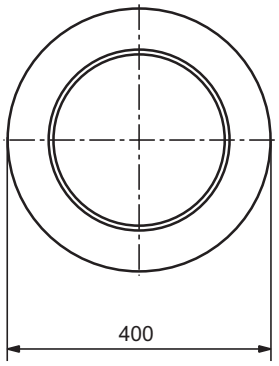

Stainless steel cowl AAS-200
for spiral-seam tube DN 200
galvanic isolation of the connection
for outside and exhaust air
of stainless steel, lamella cowl,
consisting of:
1 cowl DN 200,
1 pipe DN 200, length: 0.5 m,
2 pipes DN 200, length: 1 m and
2 wall mountings

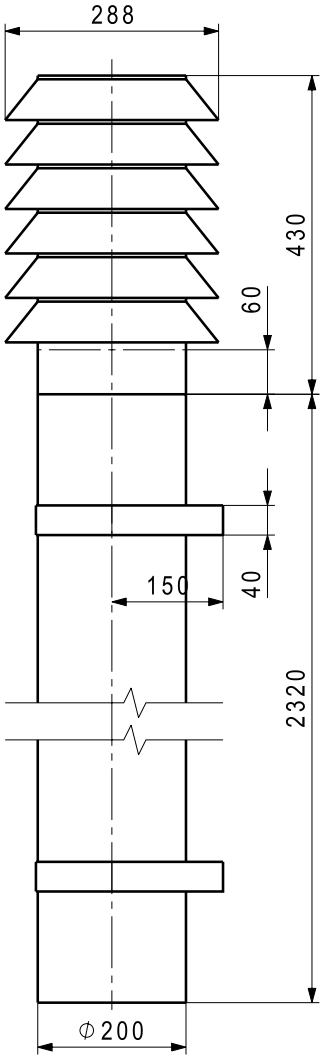

Pipe system distribution duct DN 75 and DN 90
The distribution duct is a flexible pipe of polyethylene PE-HD with a smooth inside wall, ribbed on the outside.

Antistatic coating
Weight 0.33 kg/m
Application limit: Air and ambient temperature -25…60 °C

Pipe system	Volume flow [m³/h]	Pressure drop straight pipe [Pa/m]	Press loss pipe elbow 90° (r = 2D) [Pa]
DN 75	10	0.3	0.1
DN 75	20	1.1	0.4
DN 75	30	2.5	1.0
DN 90	20	0.6	0.2
DN 90	30	1.2	0.4
DN 90	40	2.2	0.8

Flexible pipe FR

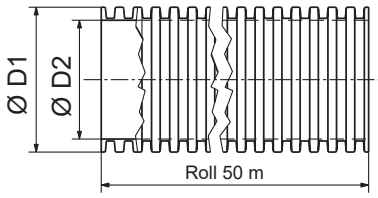

Sealing ring DI

Double sleeve DM

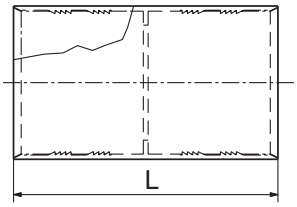

Stopper ST

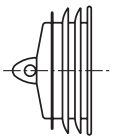

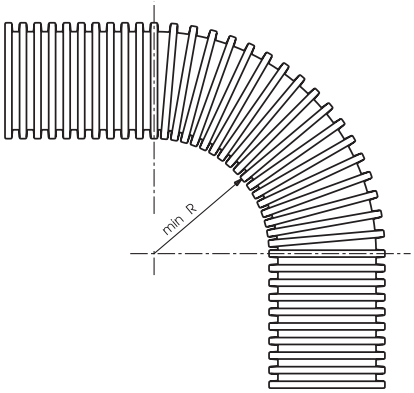

Pipe system	D1 [mm]	D2 [mm]	L [mm]	R
DN 75	75	62	100	150
DN 90	90	76	100	150

Formwork coupling SK-75/90
for flexible pipe DN 75 and 90
for extending a flexible pipe through the ceiling or the floor and extension from DN 75 to DN 90 without damaging the boarding.

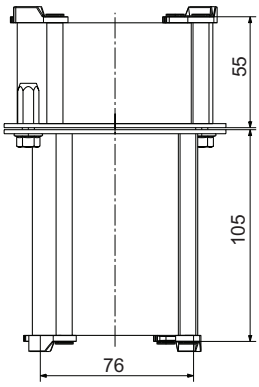

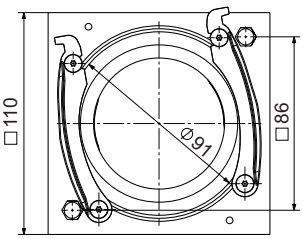

Section distributor SV-6x75
For quick, space-saving installation of flexible pipes FR-75 in ceilings/floors and walls. Each 90° connection can be rotated in increments of 45°.

After completion of the building shell, the lower distributor plate is fitted and the flexible pipes FR-75 are simply connected up. The inside of the 90° nozzles is rounded to allow easy cleaning of the ducts.

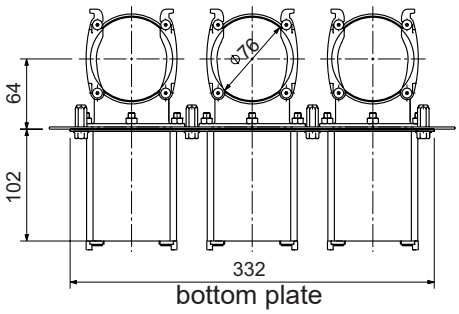

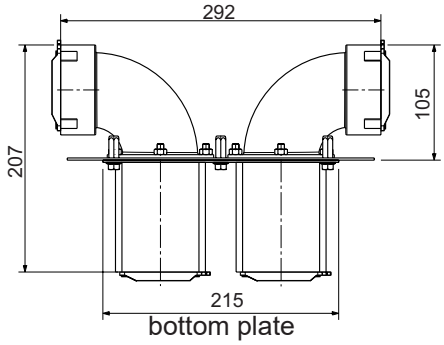

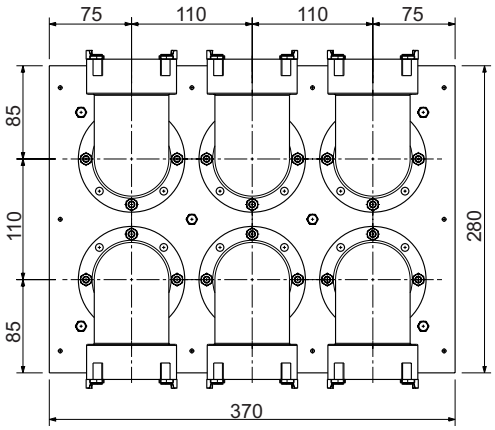

Section distributor SV-6x90
For quick, space-saving installation of flexible pipes FR-75 in ceilings/floors and walls. Each 90° connection can be rotated in increments of 45°.

After completion of the building shell, the lower distributor plate is fitted and the flexible pipes FR-75 are simply connected up. The inside of the 90° nozzles is rounded to allow easy cleaning of the ducts.

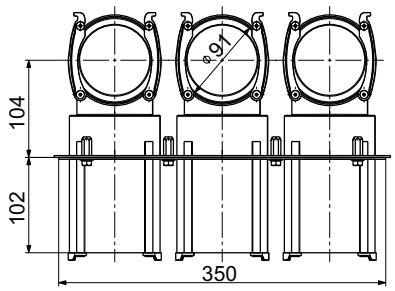

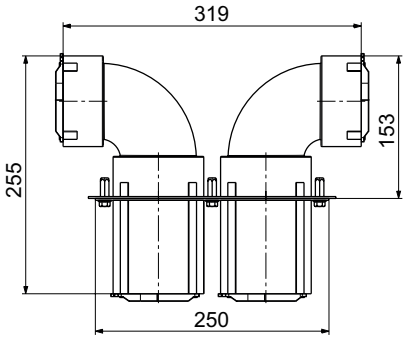

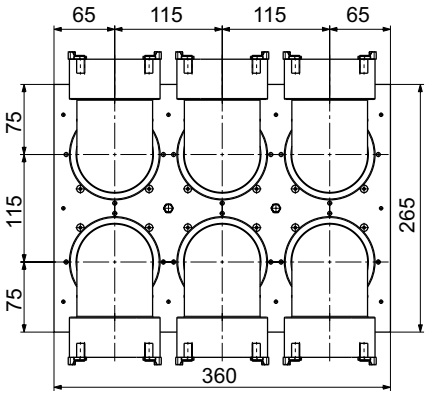

Flexible pipe crossing FRK-75
for flexible pipe DN 75
for crossing two flexible pipes DN 75
with reduced construction height (100 mm).
For one crossing 2 pieces are necessary.

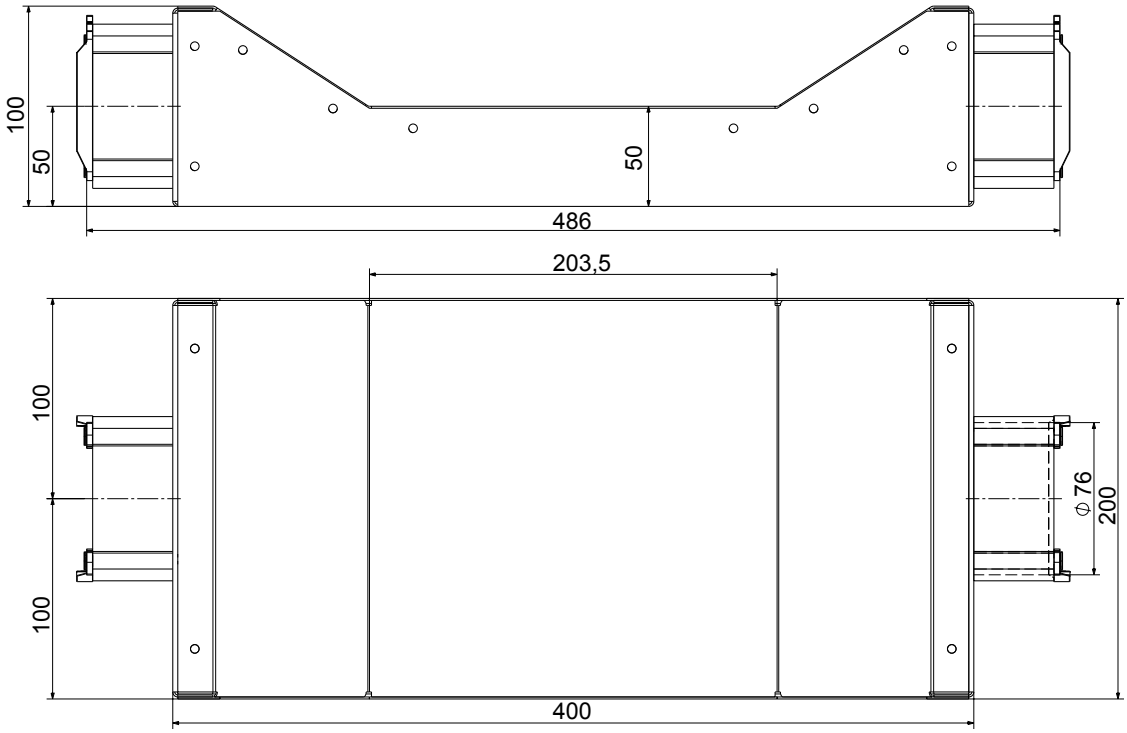

Flexible pipe crossing FRK-90
for flexible pipe DN 90
for crossing two flexible pipes DN 90
with reduced construction height (100 mm).
For one crossing 2 pieces are necessary.

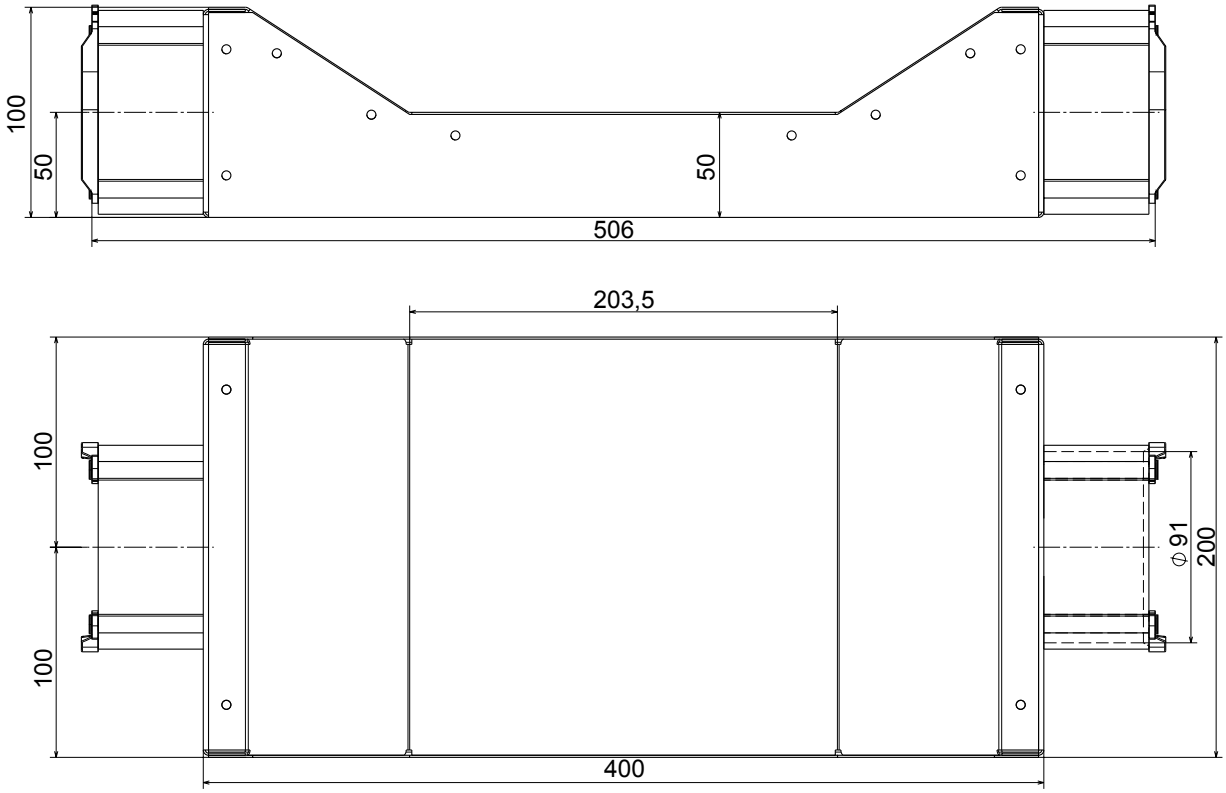

Floor grille 100, 140
inox or white colour
for flat channel system 100 and 140
Dimensions: 350 x 130 mm

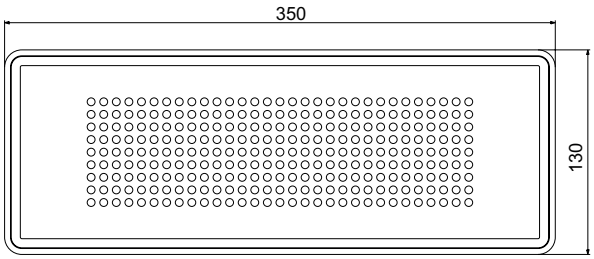

Stopper flat 75
sealing plug for outlet 90°
lateral 125 - 2 x 75

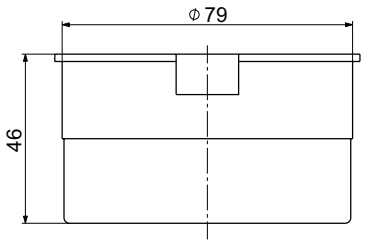

Click ring 75
for outlet 90° lateral 125 - 2 x 75

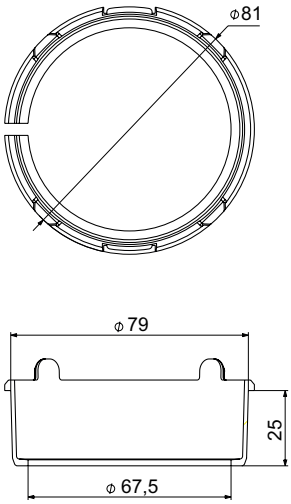

Click ring 90
for outlet 90° lateral 125 - 2 x 90

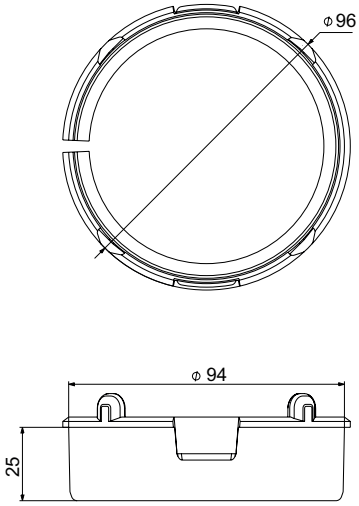

Outlet flat 90 125-75
Outlet round 90° lateral 125 - 2 x 75
made of plastic 2 x 75/125 mm
Usable length 325 mm

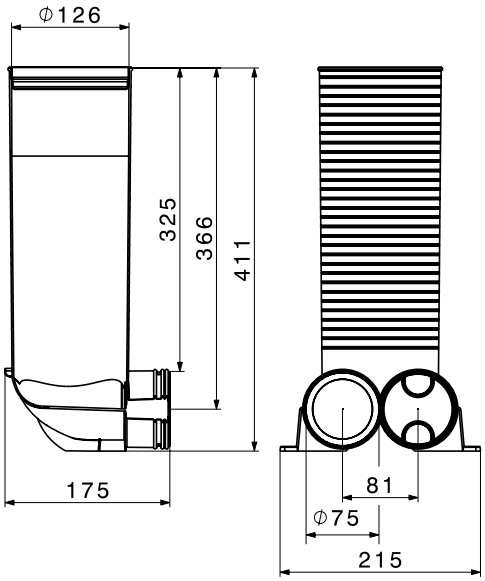

Flat channel 100
Flexible ventilation pipe 102 x 49 mm
Roll length 50 m
minimum bending radius 200 mm

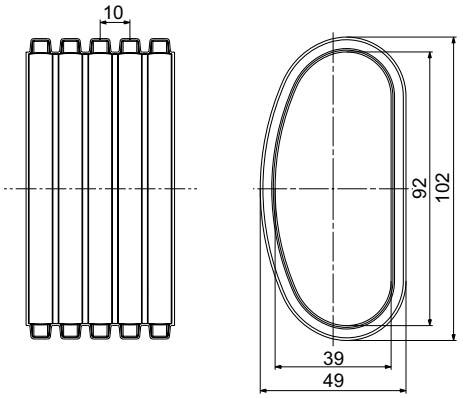

Plug flat channel (100)

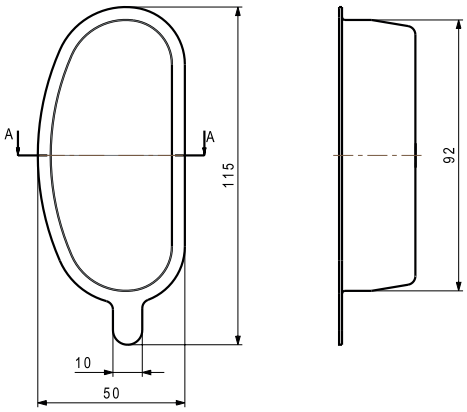

Stopper flat 100
for flat channel system 100 connections

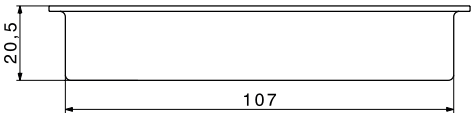

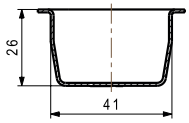

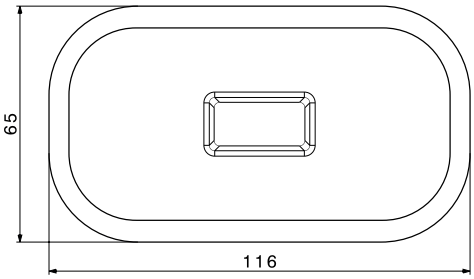

Seal flat 100
for flat channel 100

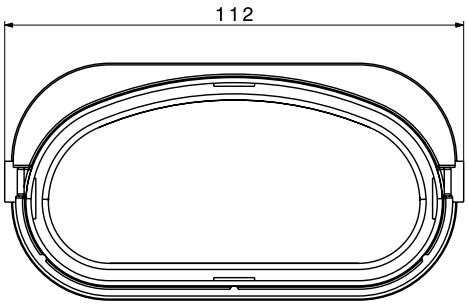

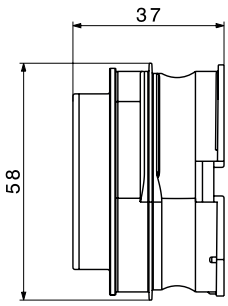

Sleeve 100
for flat channel 100

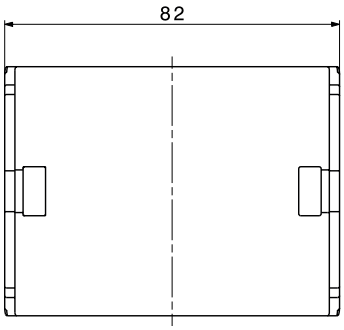

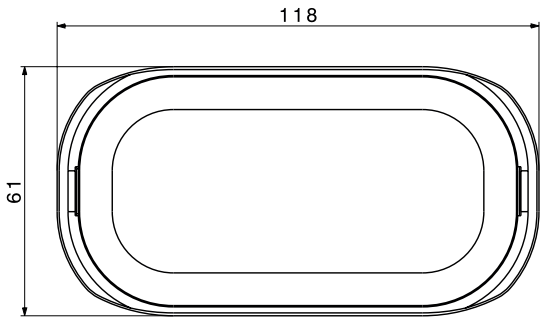

Arch horizontal flat 100
for flat channel 100

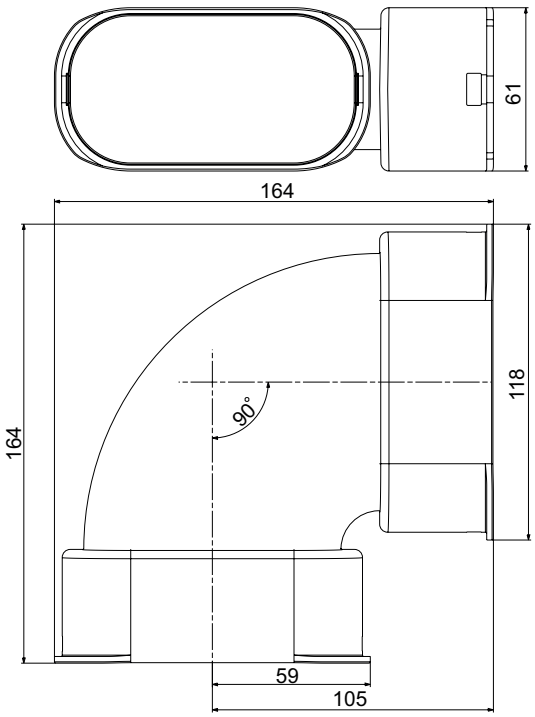

Arch vertical flat 100
for flat channel 100

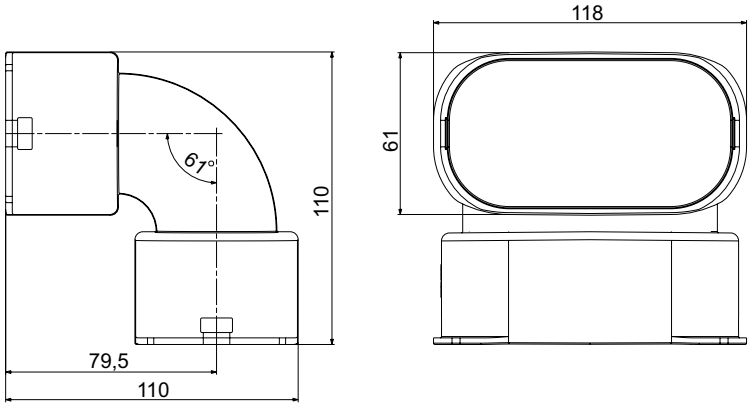

Arch vertical flat to round 100-75
Transition 90° round to flat

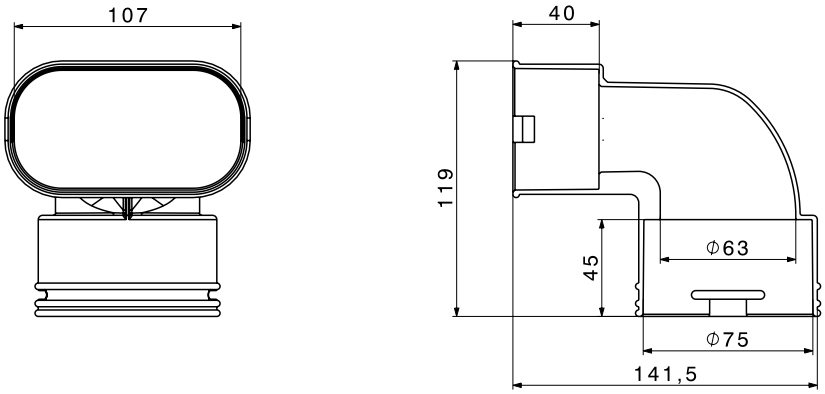

Outlet round, lateral 90° 125 - 2 x 100
for flat channel 100
incl. mounting bracket

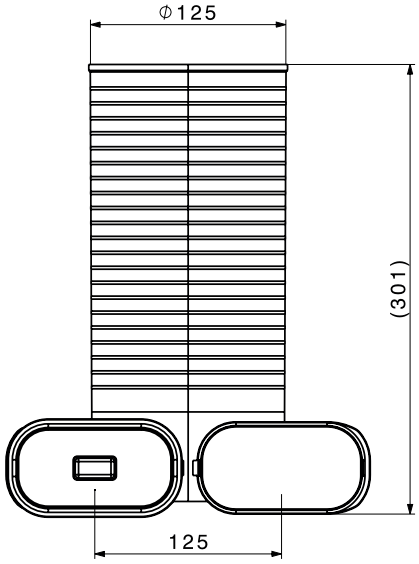

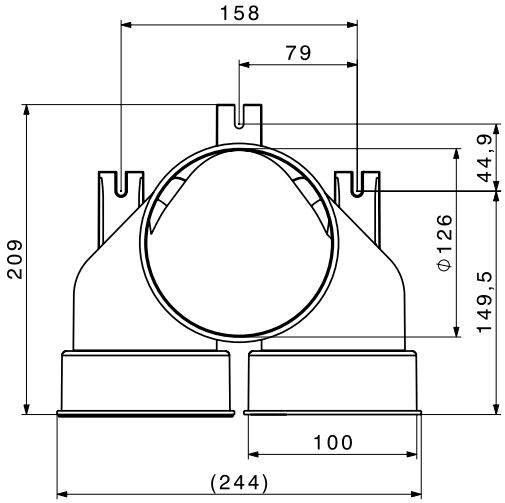

Outlet round, front 125 - 2 x 100
for flat channel 100
incl. mounting bracket

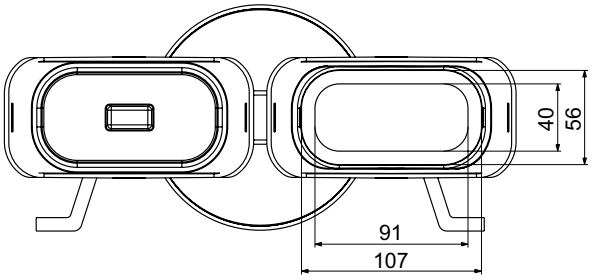

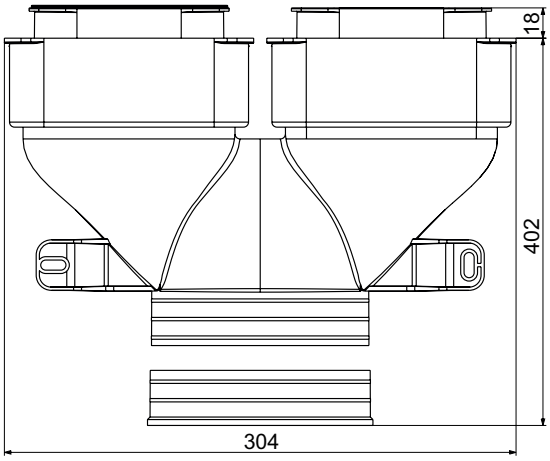

Floor exhaust flat 2 x 100
309 x 86.5 mm interior
2 flat channel 100 connections

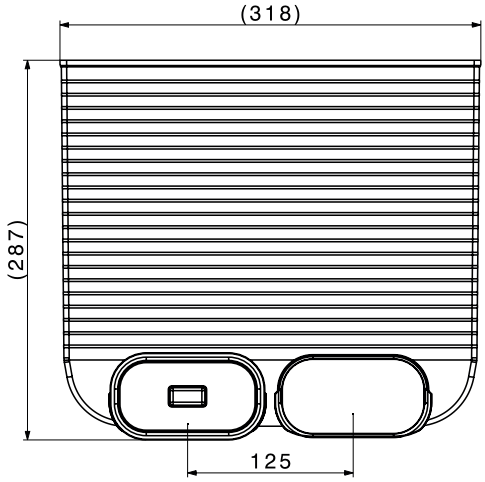

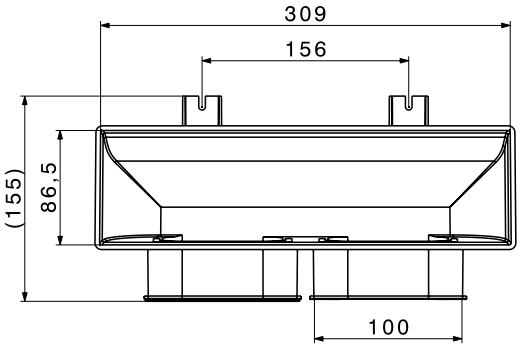

Flat channel 140
Flexible ventilation pipe 142 x 49 mm
Roll length 20 m
minimum bending radius 200 mm

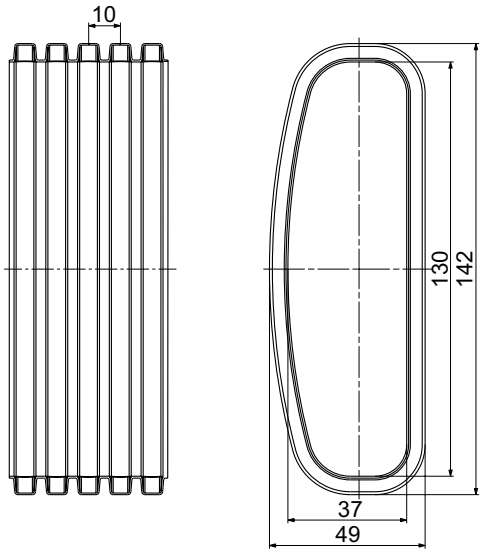

Plug flat channel (140)

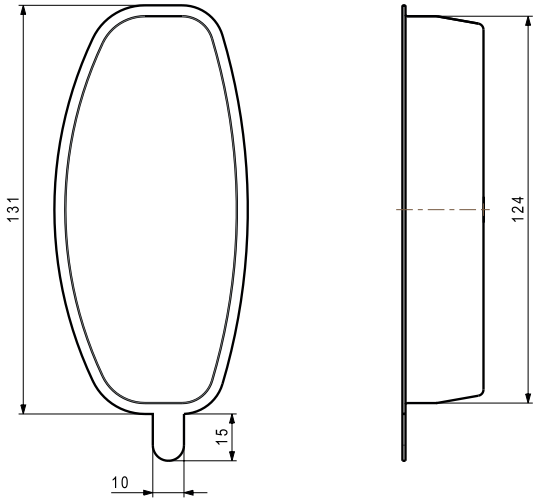

Stopper flat 140
for flat channel system 140 connections

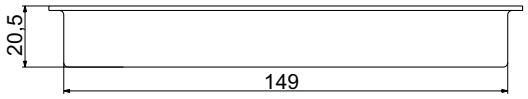

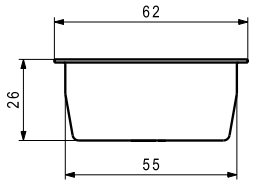

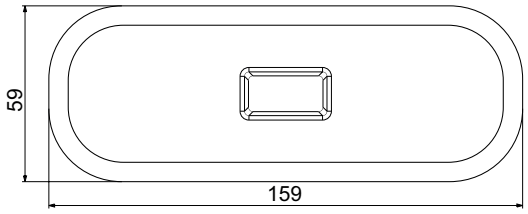

Seal flat 140
for flat channel 140

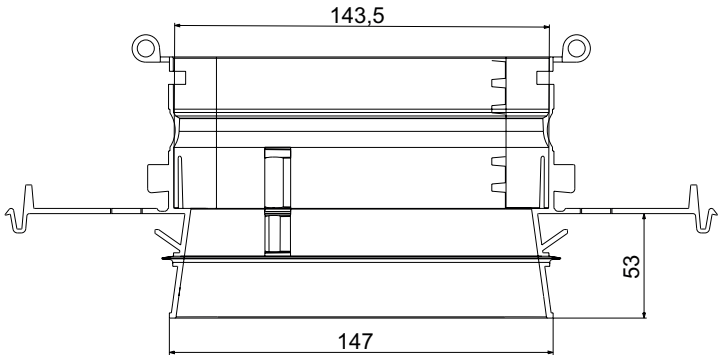

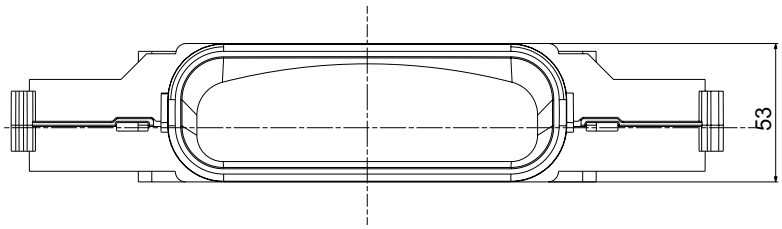

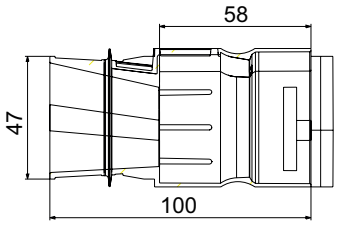

Sleeve 140
for flat channel 140

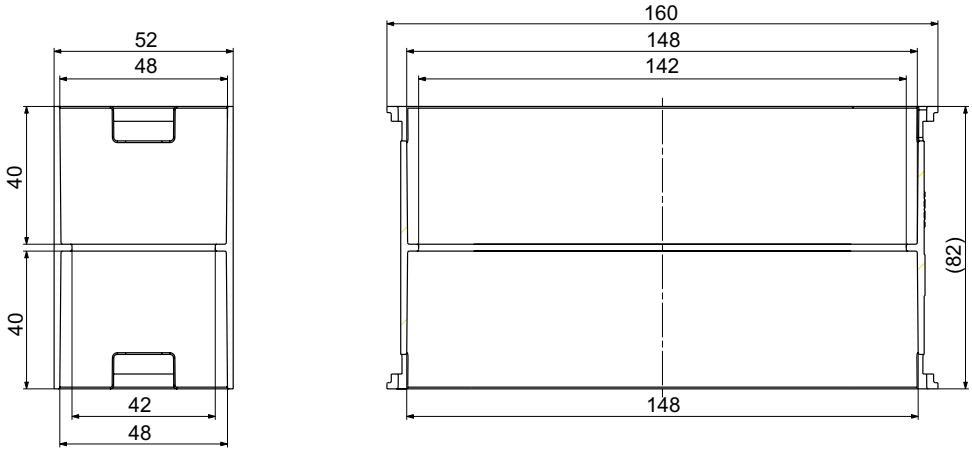

Arch horizontal flat 140
for flat channel 140

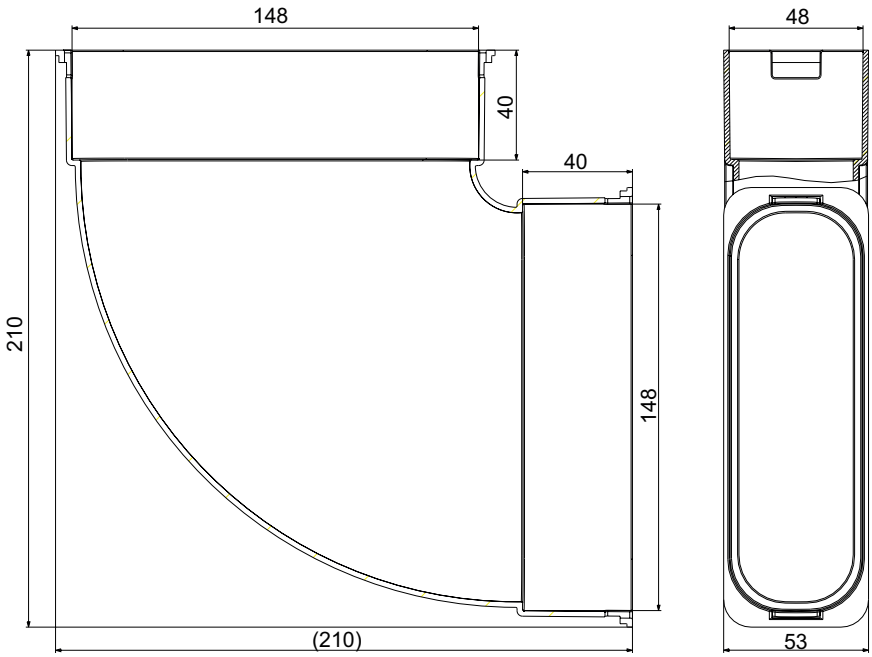

Arch vertical flat 140
for flat channel 140

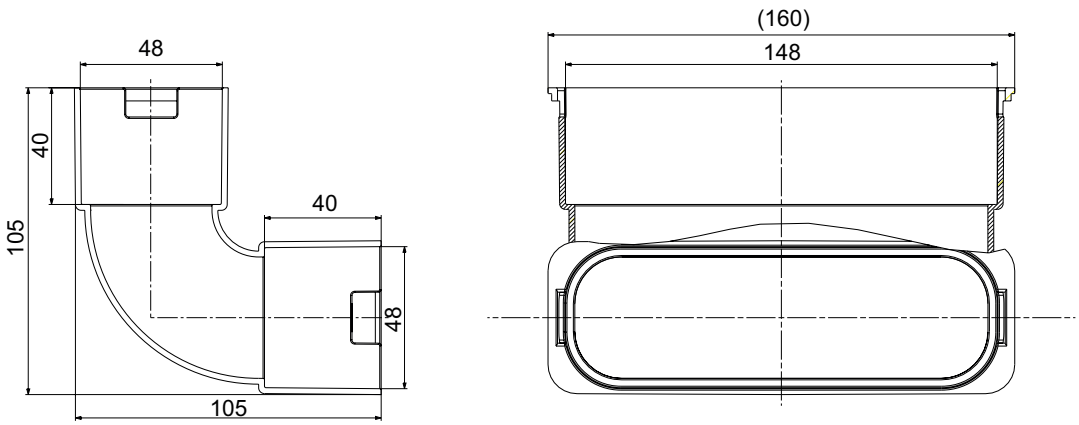

Outlet round, lateral 90° 125 - 2 x 140
for flat channel 140
incl. mounting bracket

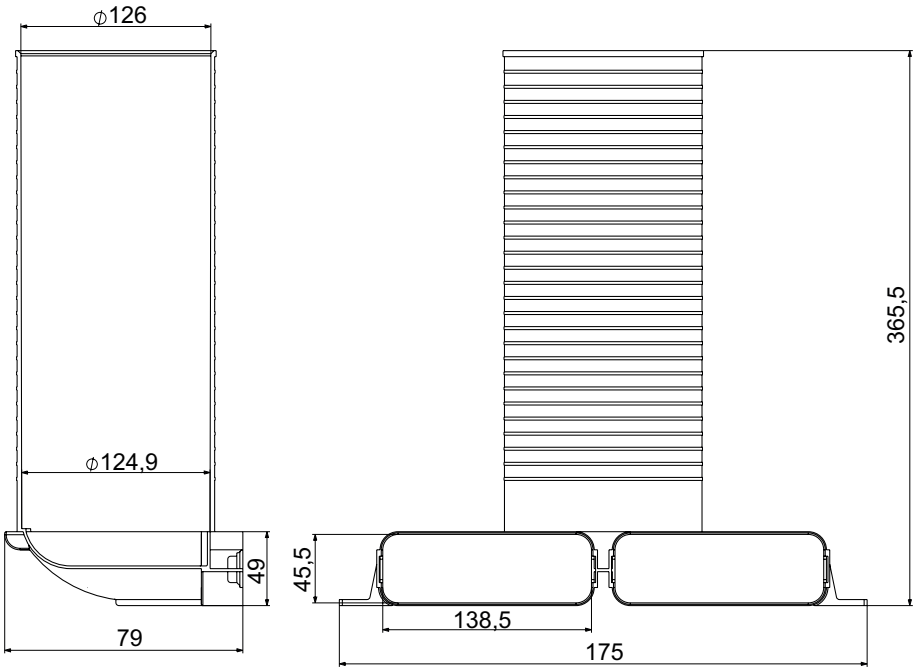

Floor exhaust flat 1 x 140
309 x 85 mm interior
1 flat channel 140 connection

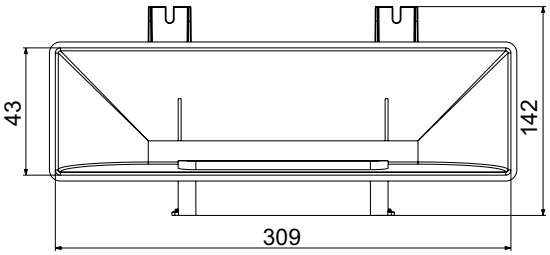

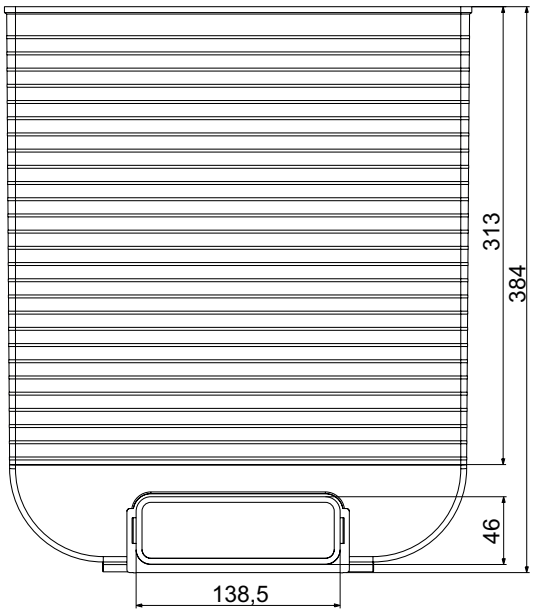

Distribution cases DN 150

Distribution case for 6, 8, 10 or 12 connections VKA-150-75-X with AP-75-X
This distribution case with an integrated silencer is used if the pipes can be arranged and laid centrally.
Orifices for setting the air quantity per flex pipe DN 75 or DN 90 (included in the scope of delivery).
Type VKA is used in combination with the connection plate AP. The connection plate is mounted in the ceiling, in the floor or in the wall (inside masonry). The distribution case is flanged onto this connection plate after the building shell is completed.

Access panel AP

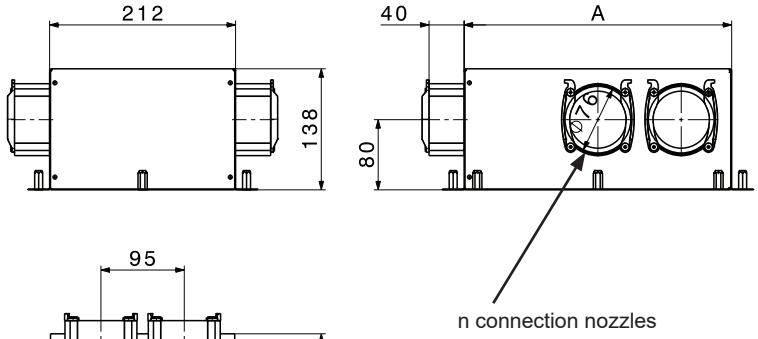

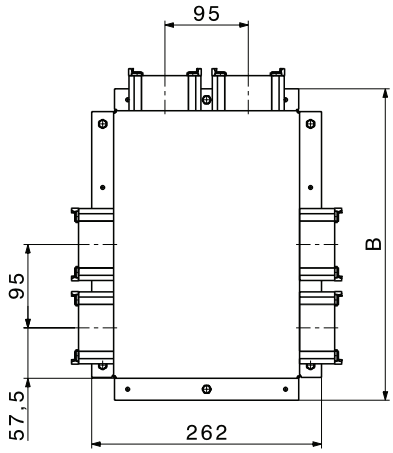

Dimensional drawing of connection plate

Type	A	B	n
AP-75x6	305	355	6
AP-75x8	400	450	8
AP-75x10	495	545	10

Distribution case VKA-150

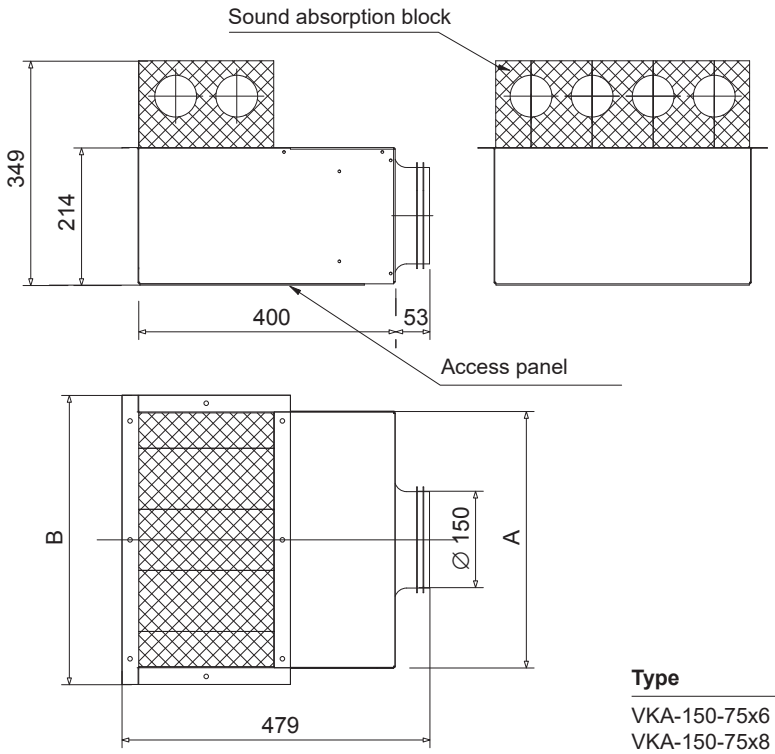

Type	A	B
VKA-150-75x6	305	355
VKA-150-75x8	400	450
VKA-150-75x10	495	545

Distribution cases DN 150

Distribution box VTB-150 14x75 1R
Air distribution box of aluzinc sheet without access panel.
Connection nozzles:
2x DN 150 supply and extract air
supply air 7x DN 75 (4x front and 3x side)
extract air 7x DN 75 (4x front and 3x side)

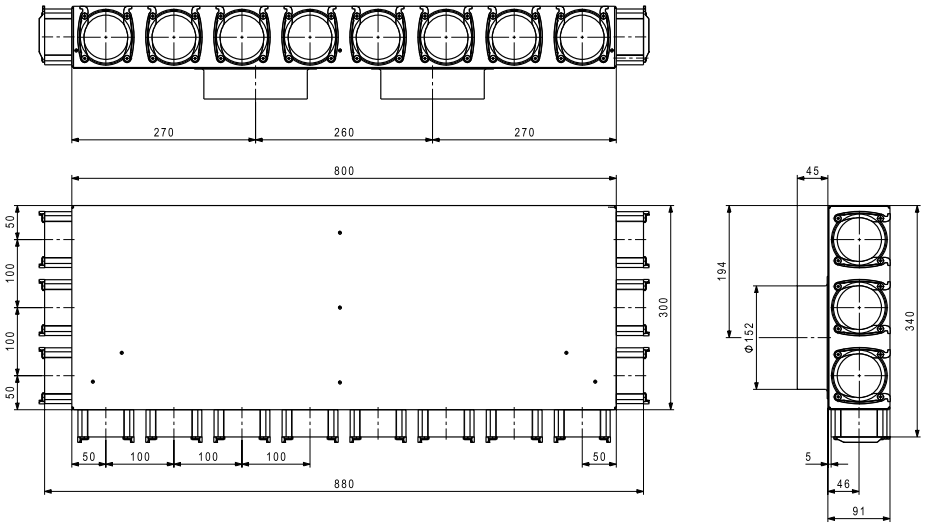

Distribution cases DN 150

Distribution box VTB-150 9x75
for concrete installation
Air distribution box of aluzinc sheet with access panel (can be painted on site). Lined on the inside with sound absorbing material.
Connection nozzle:
2x DN 150 (downward)
Supply air 9x DN 75 (5x side/ 2x front and rear each)
Extract air 9x DN 75 (5x side/ 2x front and rear each)
Consisting of: box, 6 connection brackets, 4 resp. 2 end caps, orifices for setting the air quantity per flex pipe DN 75 (included in the scope of delivery).

Distribution box VTB-150 9x75

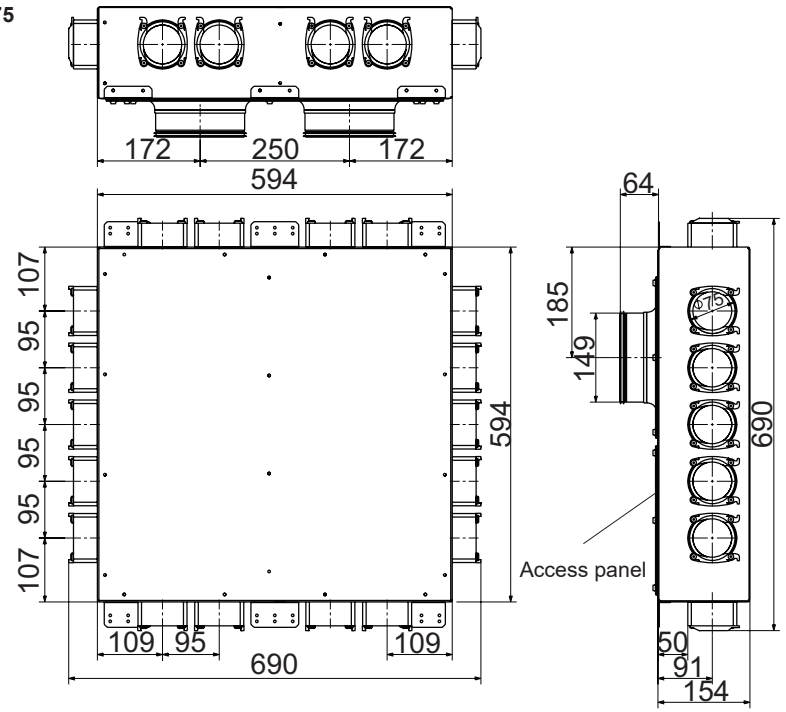

Distribution case for 6, 8 or 10 connections VK-150-75
This distribution case with an integrated silencer is used if the pipes can be arranged and laid centrally. Orifices for setting the air quantity per flexible pipe DN 75 (included in the scope of delivery). In type VK, the DN 75 connections are on the end; the connection nozzle DN 150 is supplied and can be installed on the end, top or on the left or right side. The distribution case is suitable for on-wall installation.

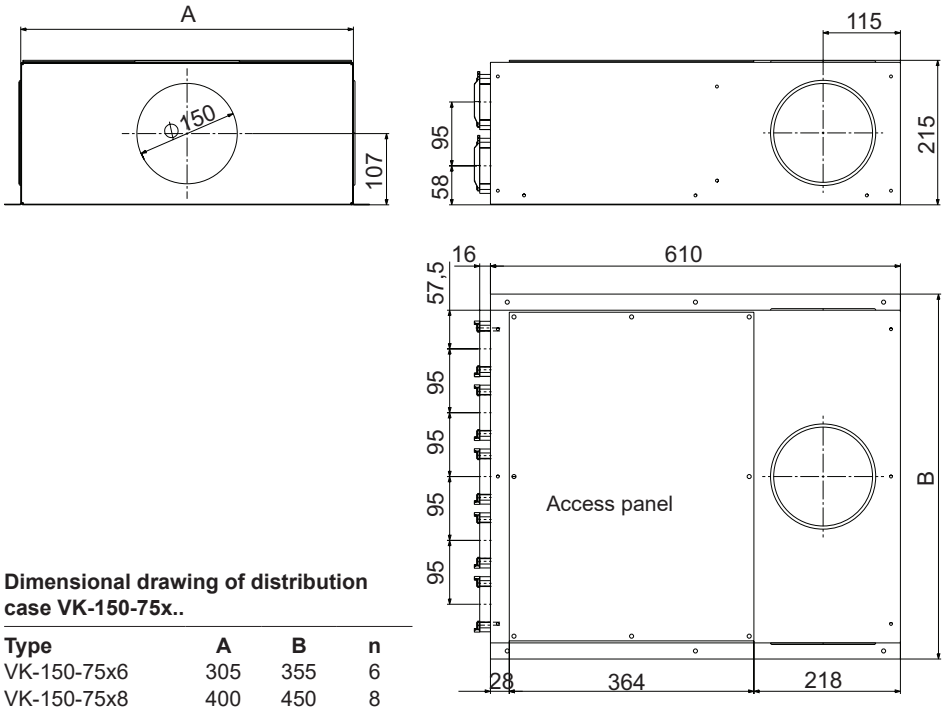

Dimensional drawing of distribution case VK-150-75x..

Type	A	B	n
VK-150-75x6	305	355	6
VK-150-75x8	400	450	8
VK-150-75x10	495	545	10

Distribution cases DN 150

Storey distributor GVT-3 ... GVT-6
Storey distributor with 4 connection options for the main duct,
incl. 2 connection nozzles DN 150,
incl. 3 sealing caps DN 150.
Flexible installation and easy cleaning of the pipes via the access panels on both sides.

Orifices for setting the air quantity per flexible pipe DN 75 or DN 90 (included in the scope of delivery). Resonators for sound insulation.
Material: Galvanised steel
Inside lining: Sound absorbing mat

The mounting holder MH for floor distributor GVT-3 ... GVT-6 must be ordered separately.

Storey distributor GVT-3

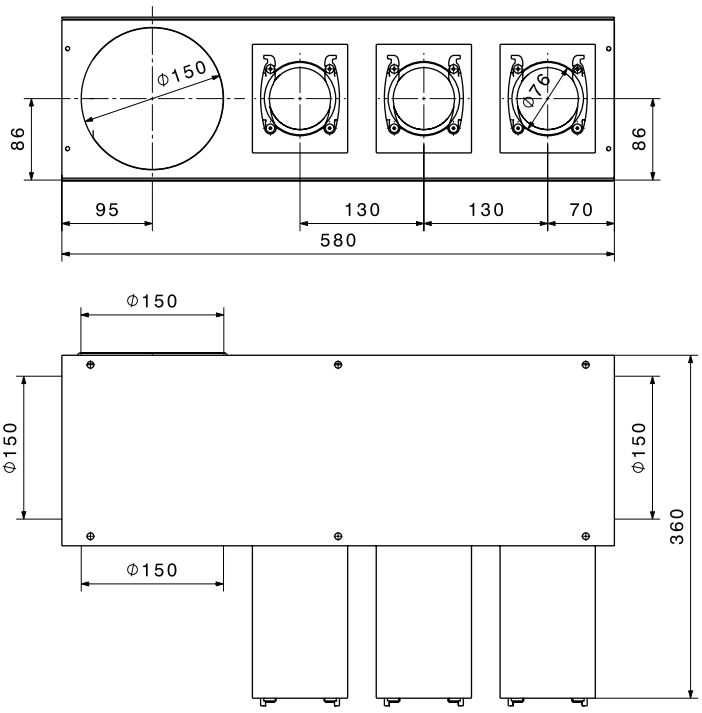

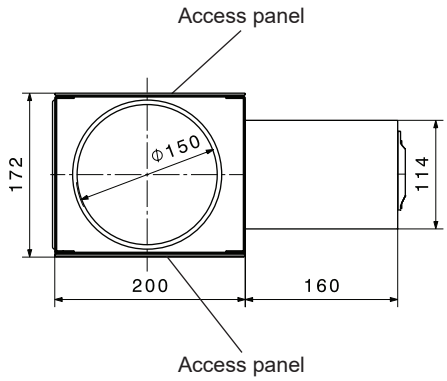

Storey distributor GVT-4

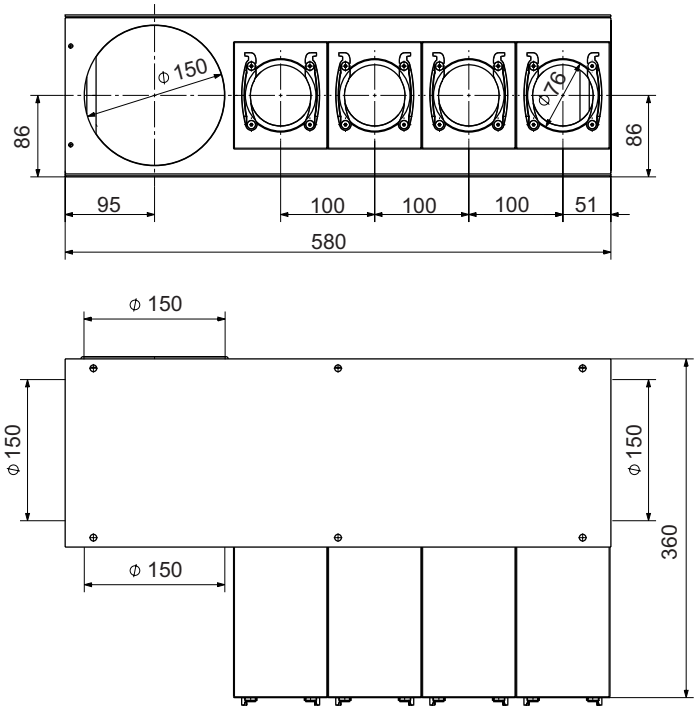

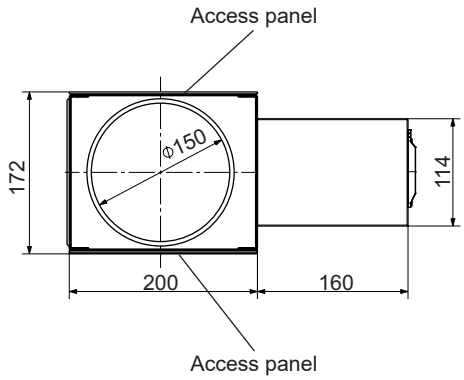

Storey distributor GVT-5

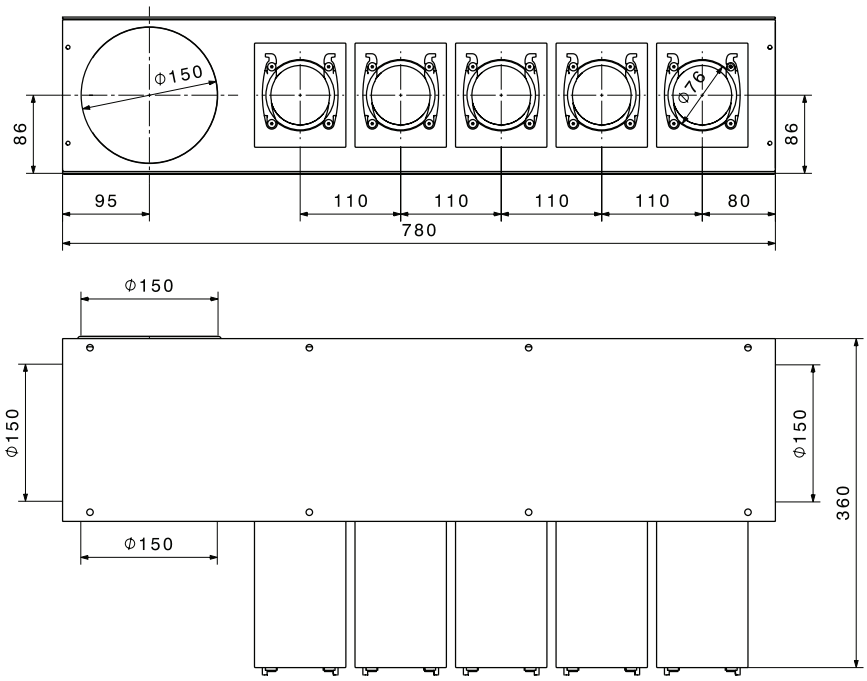

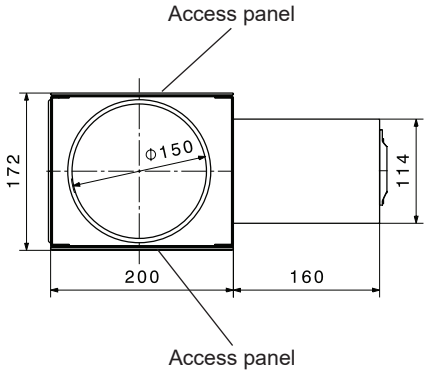

Storey distributor GVT-6

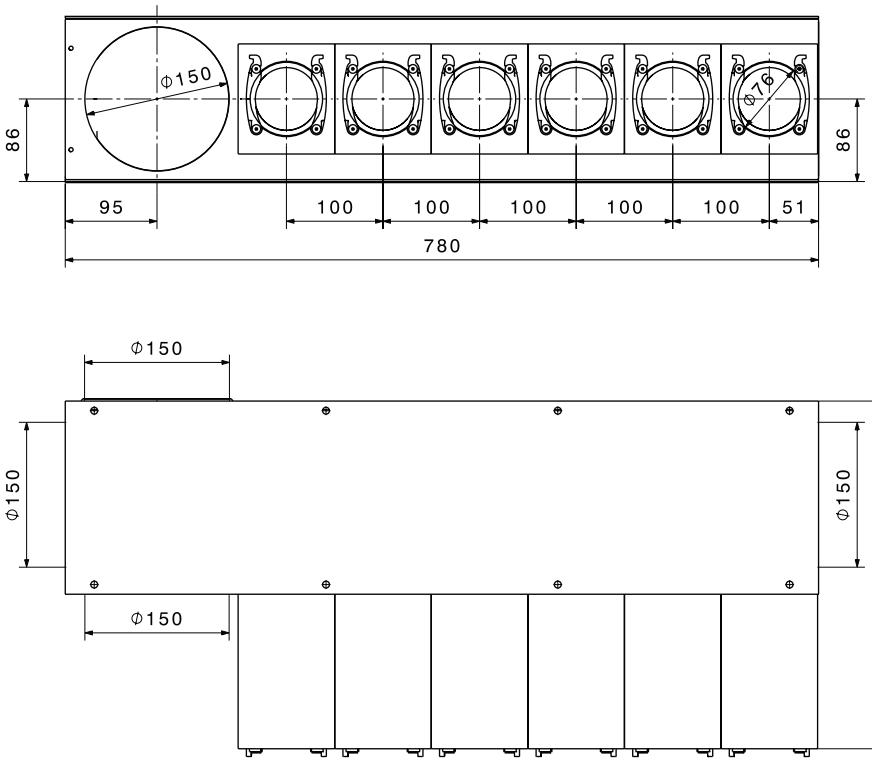

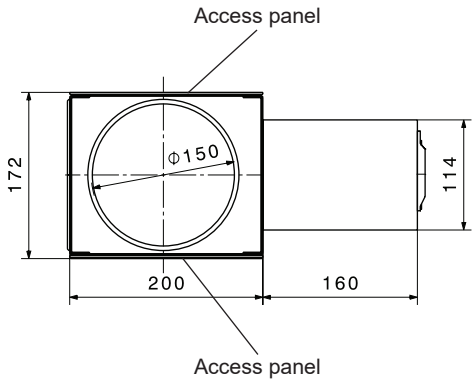

Distribution cases DN 160

In-wall distribution case 6 x 75
for concrete installation
Distribution case of aluzinc sheet. With one connection nozzle DN 160 (upwards and downwards) and 2 x 3 nozzles DN 75 (lateral), incl. 2 end covers, 1 spigot DN 160, inside lining of sound insulation material, orifices for setting the air quantity per flexible pipe DN 75 (included in the scope of delivery).

UPVK 6 x 75

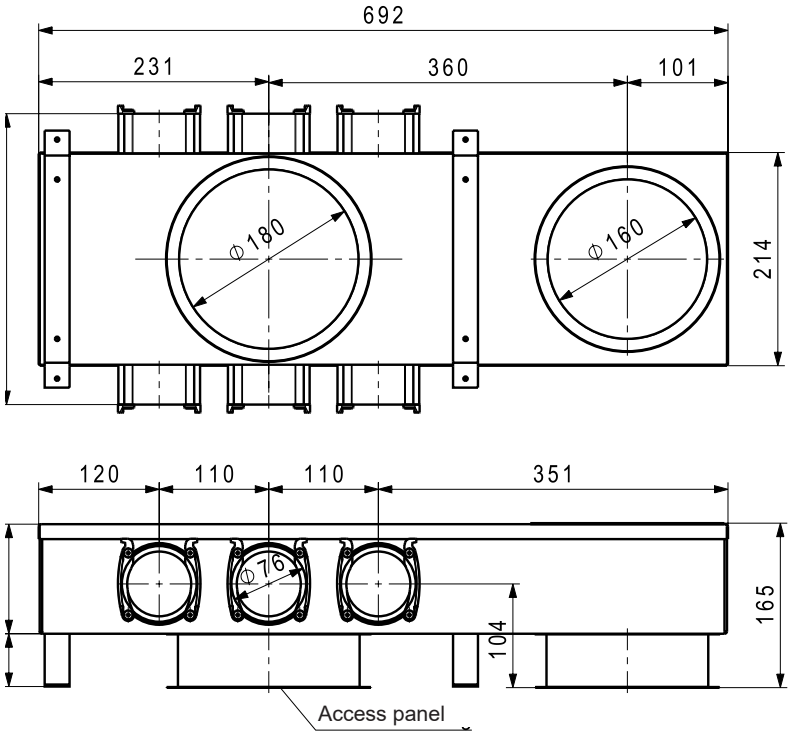

In-wall distribution case 10 x 75
for concrete installation
Distribution case of aluzinc sheet for encasing in concrete. With one connection nozzle DN 160 (upwards and downwards) and 2 x 5 nozzles DN 75 (lateral), incl. 4 end covers, 1 spigot DN 160, inside lining of sound insulation material. Orifices for setting the air quantity per flexible pipe DN 75 (included in the scope of delivery).

UPVK 10 x 75

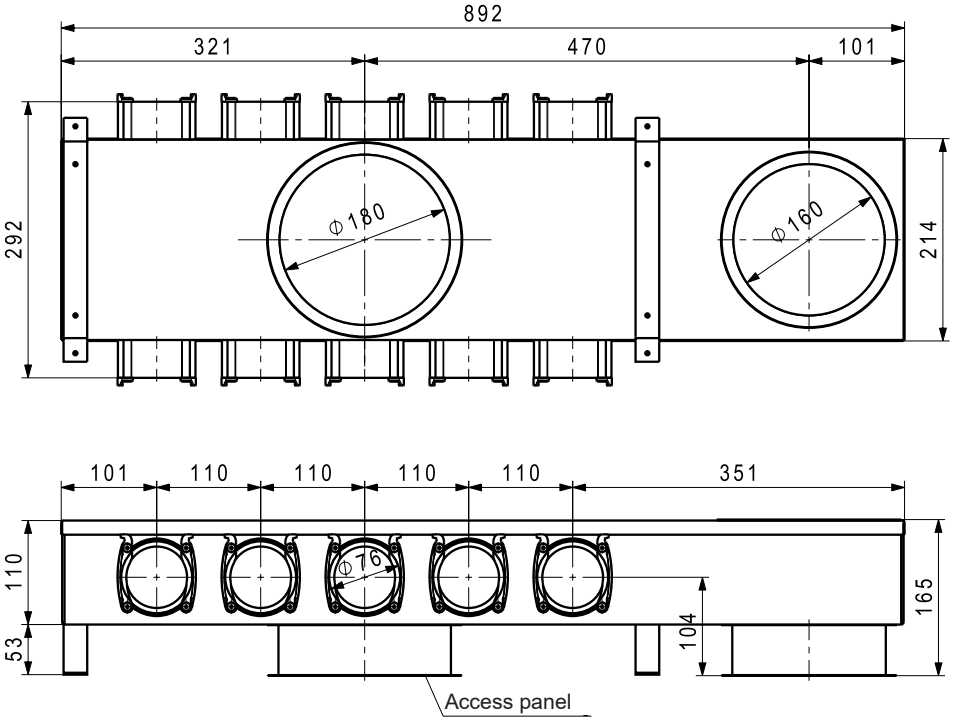

Distribution cases DN 160

In-wall distribution case UPVKS 10 x DN X
for concrete installation
Distribution case of aluzinc sheet for encasing in concrete. With one connection nozzle DN 160 (on face) and 2 x 5 nozzles DN 90 and DN 75 (lateral), incl. 4 end covers, 1 spigot DN 160, inside lining of sound insulation material. Orifices for setting the air quantity per flexible pipe DN 75 or DN 90 (included in the scope of delivery).

In-wall distribution case UPVKS 10 x 75

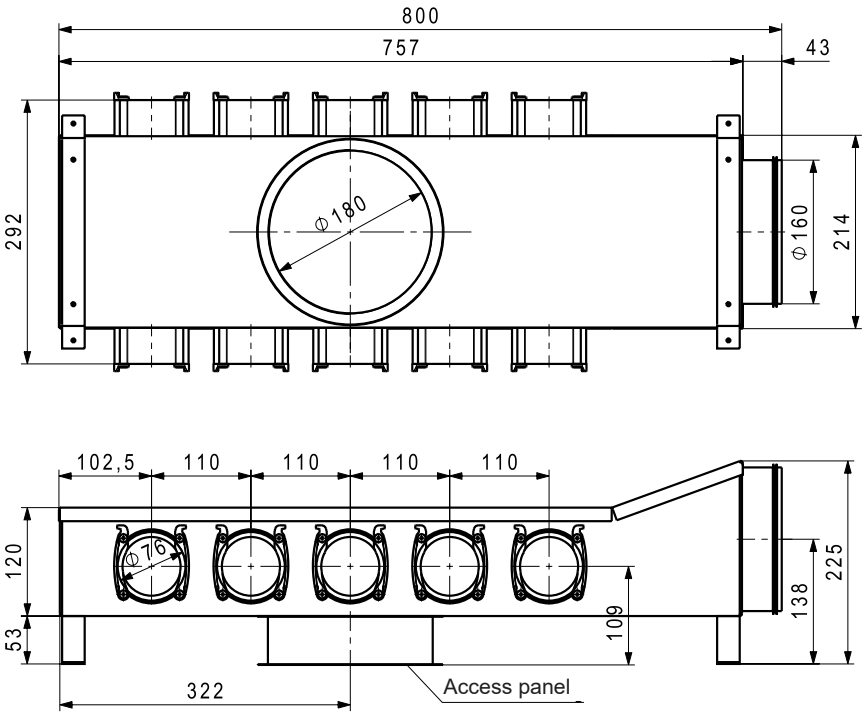

In-wall distribution case UPVKS 10 x 90

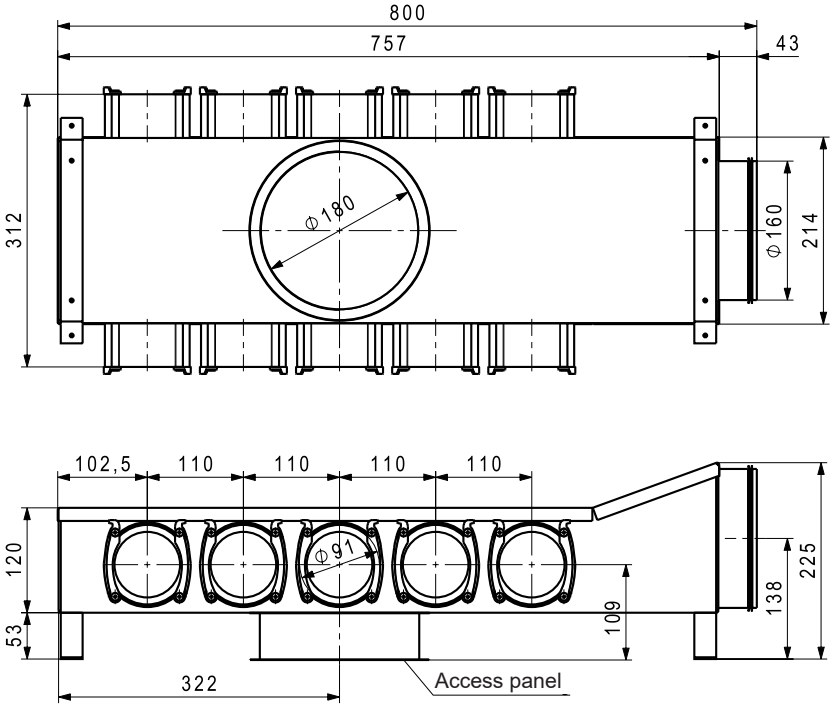

Distribution cases DN 180

Distribution case for 6, 8 or 10 connections
VK-180-75 resp. VK-180-90
This distribution case with an integrated silencer is used if the pipes can be arranged and laid centrally. Orifices for setting the air quantity per flexible pipe DN 75 or DN 90 (included in the scope of delivery).
In type VK, the DN 75 resp. DN 90 connections are on the end; the connection nozzle DN 180 is supplied and can be installed on the end, top or on the left or right side. The distribution case is suitable for on-wall installation.

Distribution case VK-180-75

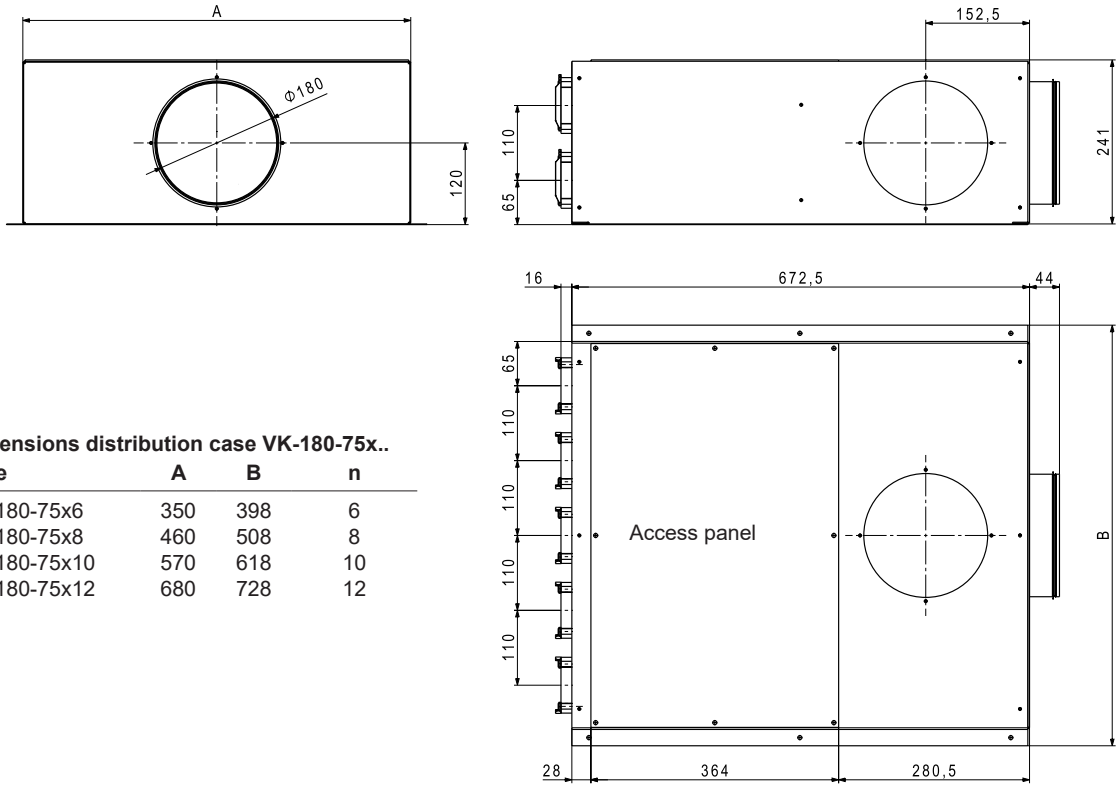

Dimensions distribution case VK-180-75x..

Type	A	B	n
VK-180-75x6	350	398	6
VK-180-75x8	460	508	8
VK-180-75x10	570	618	10
VK-180-75x12	680	728	12

Distribution case VK-180-90

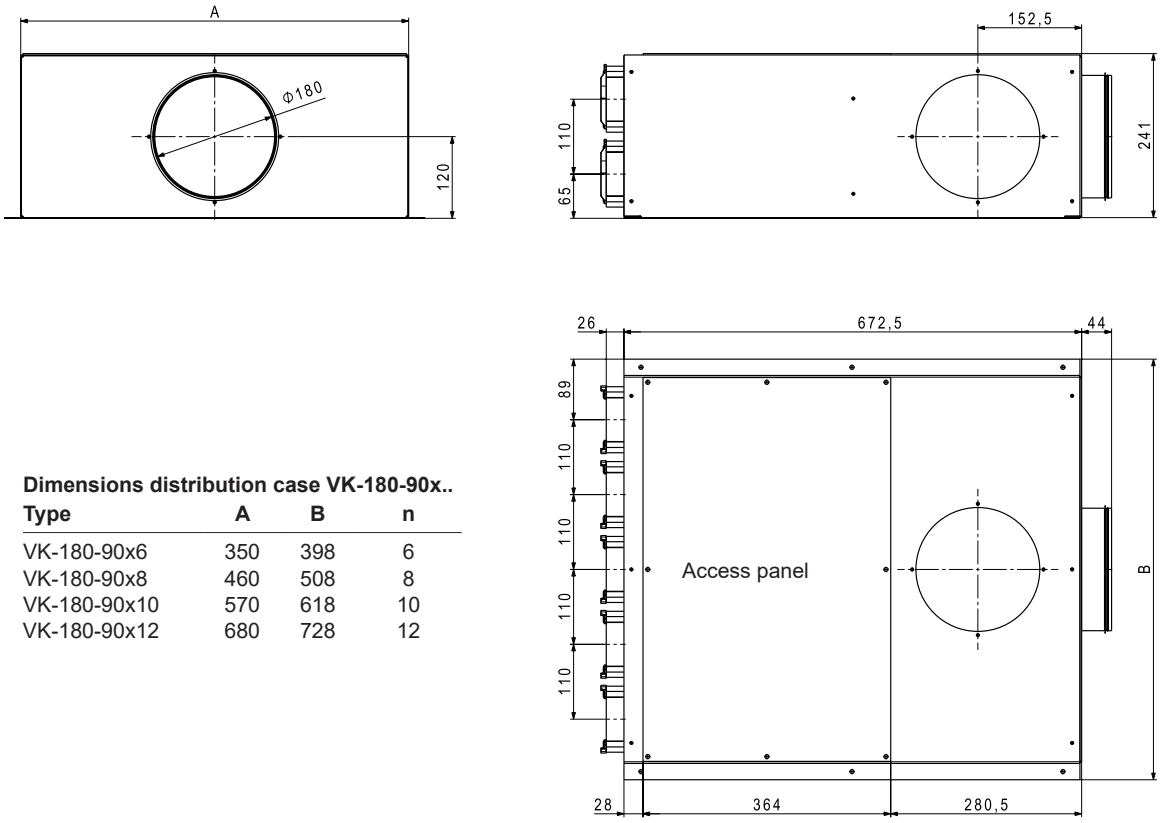

Dimensions distribution case VK-180-90x..

Type	A	B	n
VK-180-90x6	350	398	6
VK-180-90x8	460	508	8
VK-180-90x10	570	618	10
VK-180-90x12	680	728	12

Distribution cases DN 200

In-wall distribution cases UPVK 200-90x12
for concrete installation
Air distribution case of aluzinc sheet. Lined on the inside with sound absorbing material.
Connection nozzles 2x DN 200 (downwards/upwards), 12 (2 x 6) DN 90 (sideways).
Consisting of: distribution case, 6 end covers, 1 connection nozzle DN 200, orifices for setting the air quantity per flexible pipe DN 90 (included in the scope of delivery).

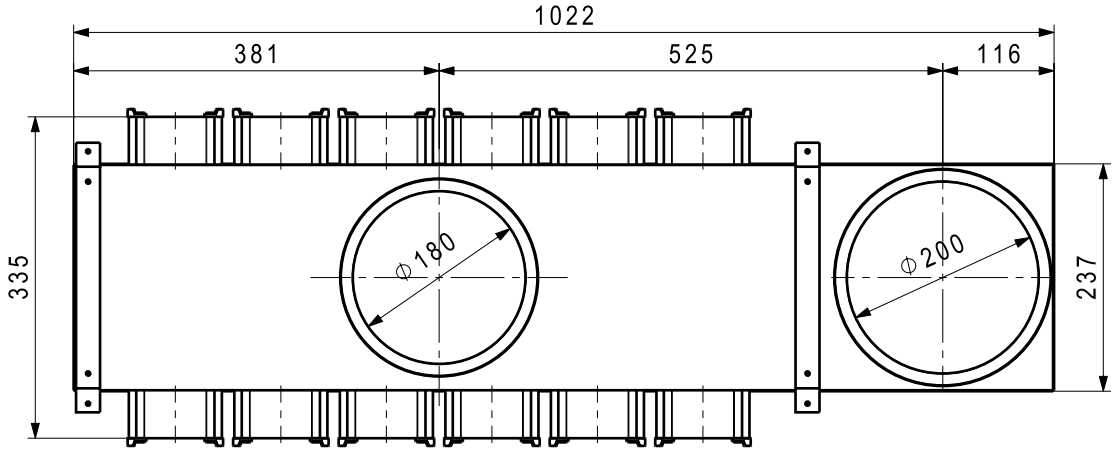

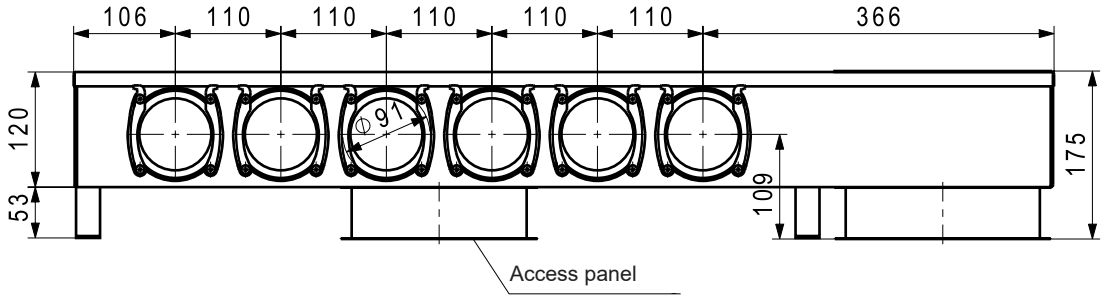

Distribution case VK200-75x15
Air distribution case of aluzinc sheet with access panel.
Inside with sound absorption block.
Connection nozzles:
1 x DN 200 (on the back)
15 x (3x5) DN 75 (on the front)
Consisting of:
distribution case, baffles for adjusting the air flow for each flexible pipe DN 75 (included in the scope of delivery).

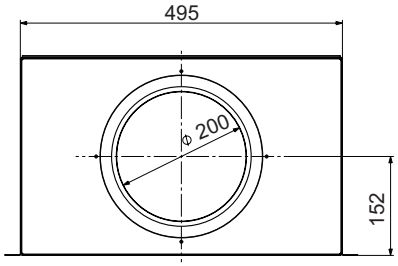

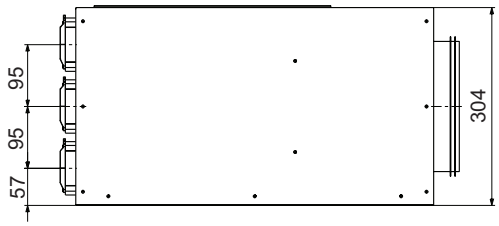

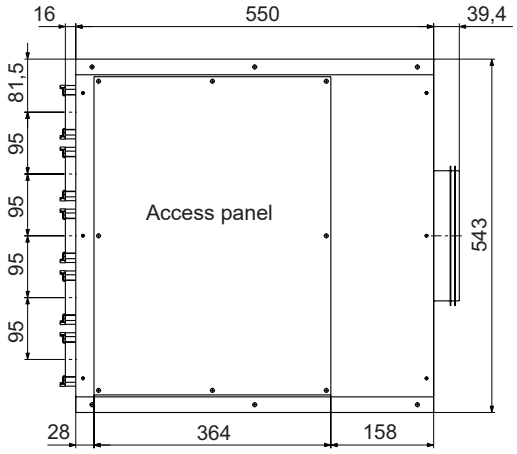

Floor grille BD-30-75
For installation in the floor structure, supply air volume flow 30 m³/h. Perforated stainless steel grille in an adjustable casing, height 130-180 mm, inner component of stainless steel with 3 contact points, outer component of aluzinc sheet with 2 fastening catches and one connection nozzle for flexible pipe FR-75. Only suitable for supply air.

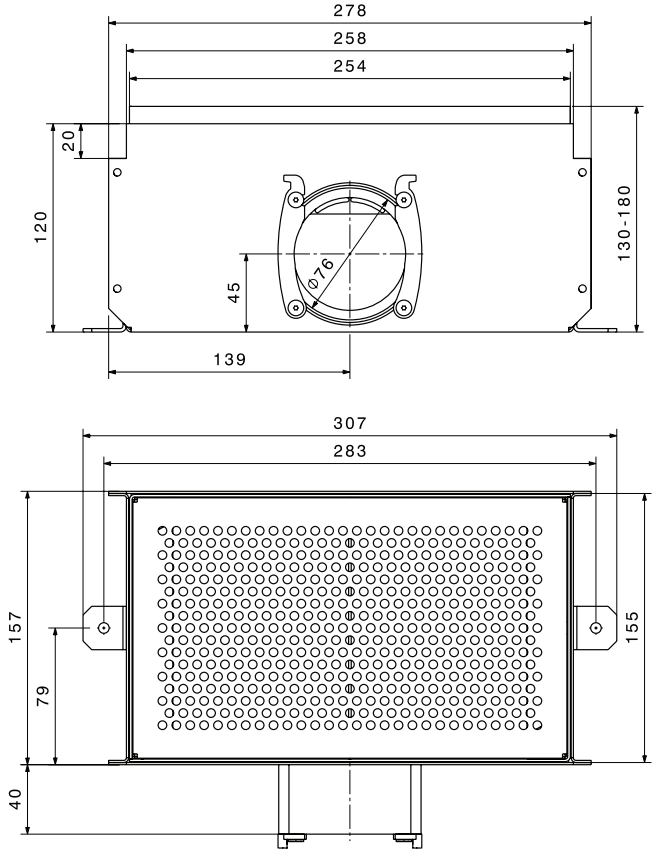

Floor grille BD-30-90
For installation in the floor structure, supply air volume flow 40 m³/h. Perforated stainless steel grille in an adjustable casing, height 130-180 mm, inner component of stainless steel with 3 contact points, outer component of aluzinc sheet with 2 fastening catches and one connection nozzle for flexible pipe FR-90. Only suitable for supply air.

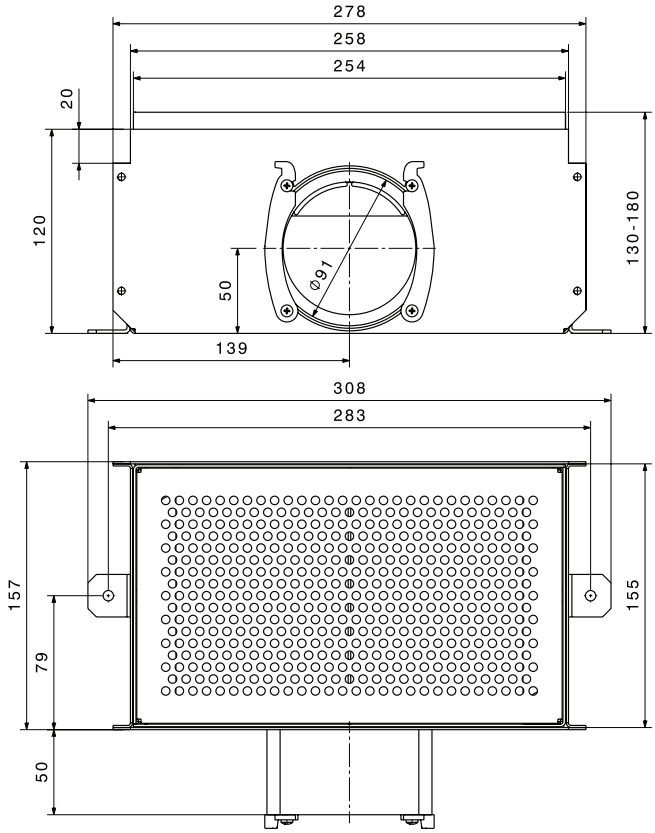

Connection housing AG-60
In combination with the design grilles.
The extension allows fine adjustment of the grille (rotating) after installation.
Suitable for installation in mass concrete, masonry walls or lightweight construction.
Of plastic with 2 connection nozzles DN 75.
Incl. fixing angles, sound absorbing mat and insert block as building protection cover and plastering aid.
Accessory: extract air filter AGF-60/90.
Suitable for supply air or extract air.

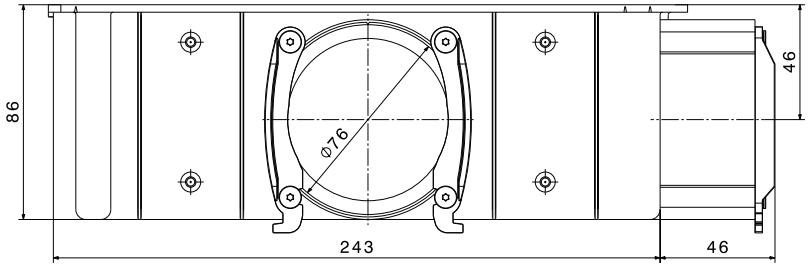

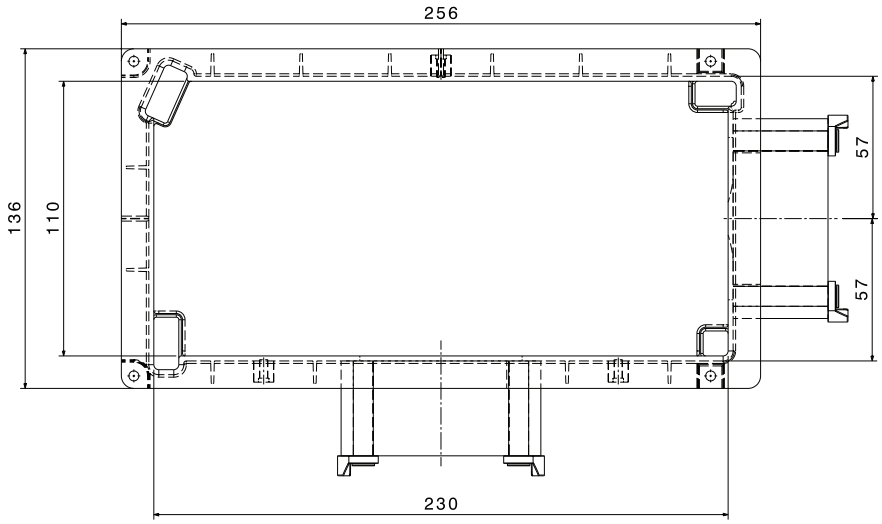

Connection housing AG-90
In combination with the design grilles.
The housing allows fine adjustment of the grille (rotating) after installation.
Suitable for installation in mass concrete, masonry walls or lightweight construction.
Of plastic with 2 connection nozzles DN 90.
Incl. fixing angles, sound insulation mat and insert block as building protection cover and plastering aid.
Suitable for supply air or extract air.

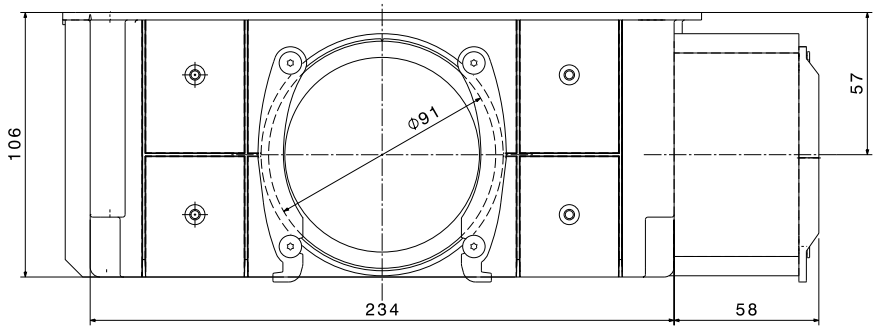

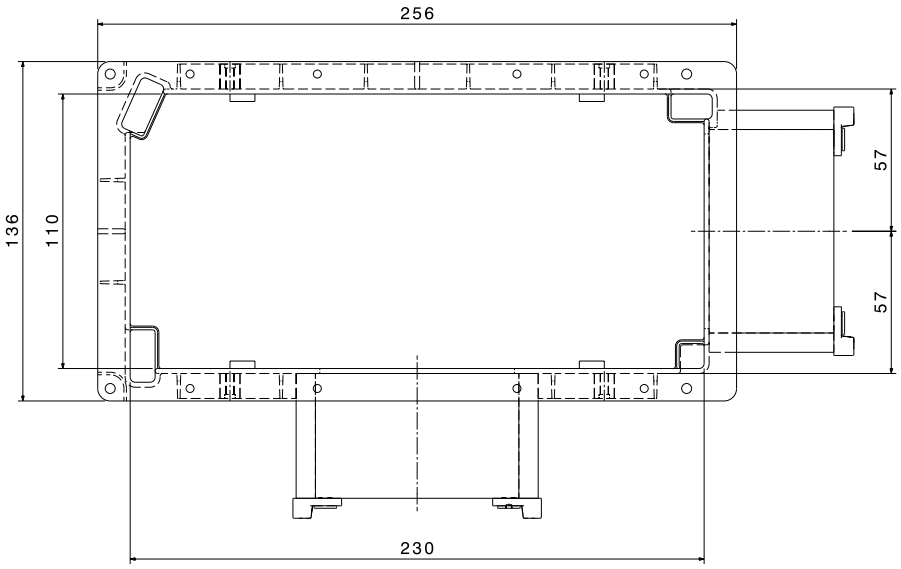

Connection housing quick 75
for supply and extract air incombination with the design grilles. The housing allows fine adjustment of the grilles after installation. Plastic housing with 2 connection nozzles DN 75. Very easy to mount, no nails in concrete after stripping.
Supply air:
1 x DN 75 up to 30 m³/h
2 x DN 75 up to 40 m³/h
Extract air:
1 x DN 75 up to 30 m³/h
2 x DN 75 up to 60 m³/h

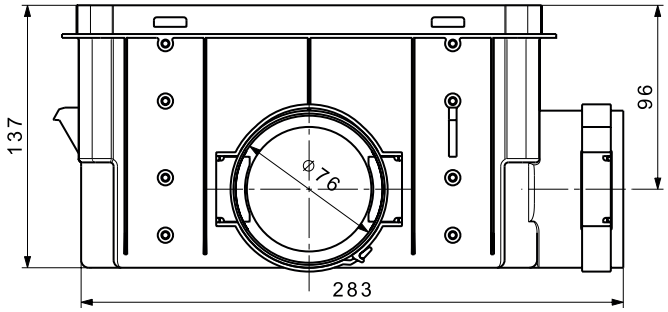

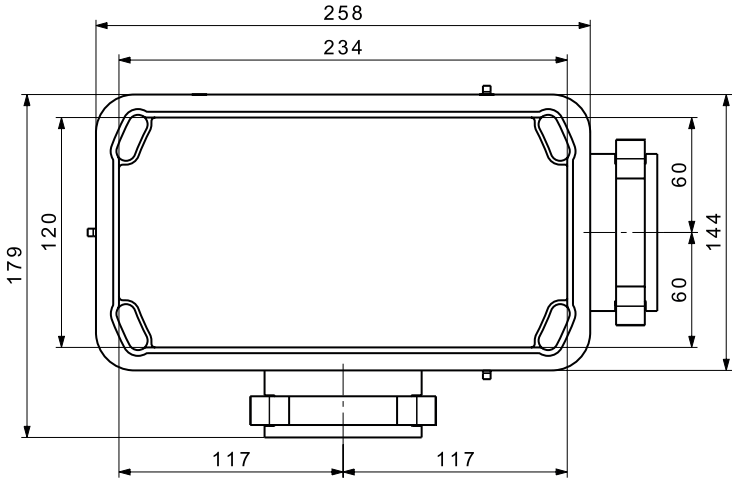

Connection housing quick 90
for supply and extract air in combination with the design grilles. The housing allows fine adjustment of the grilles after installation. Plastic housing with 2 connection nozzles DN 90. Very easy to mount, no nails in concrete after stripping.
Supply air:
1 x DN 90 up to 40 m³/h
Extract air:
1 x DN 90 up to 60 m³/h
Suitable for installation in mass concrete

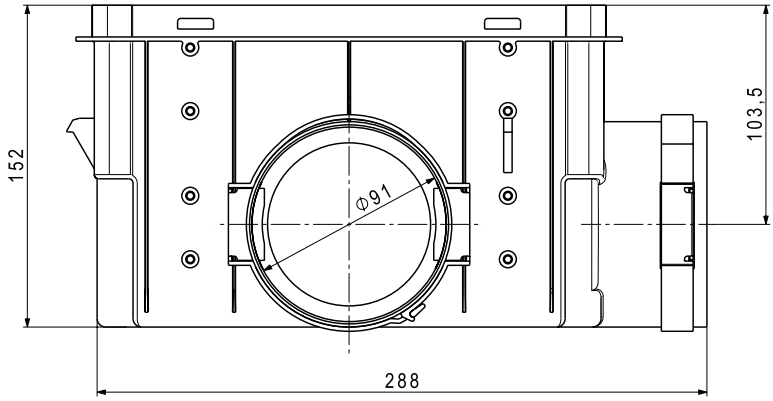

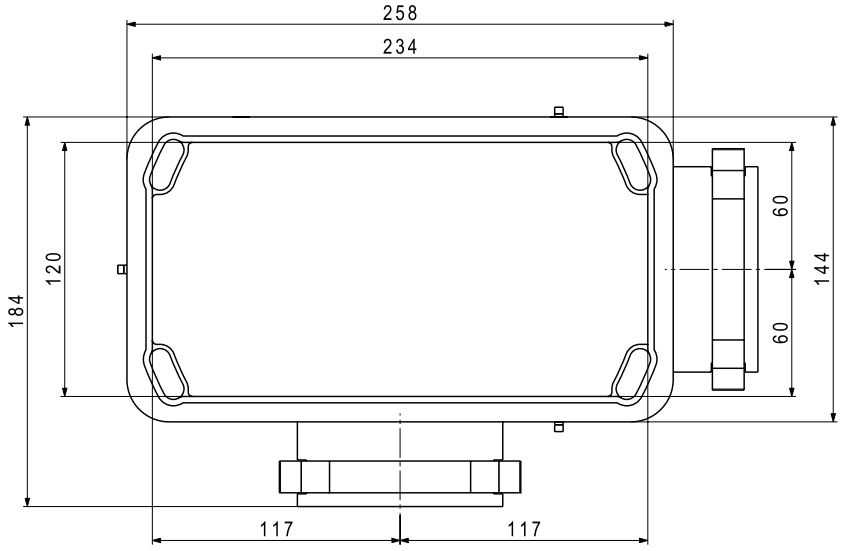

Extension VAG-60/VAG-90
For installation of AG-60 and AG-90 on the formwork panel. Extension permits precise grille alignment after installation.

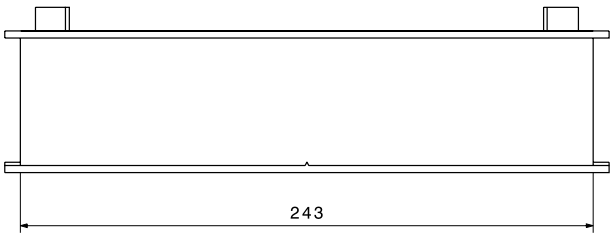

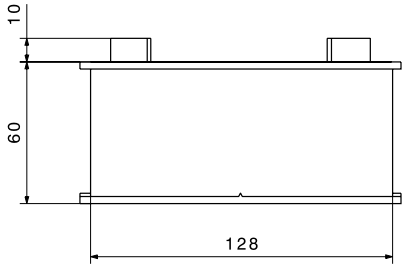

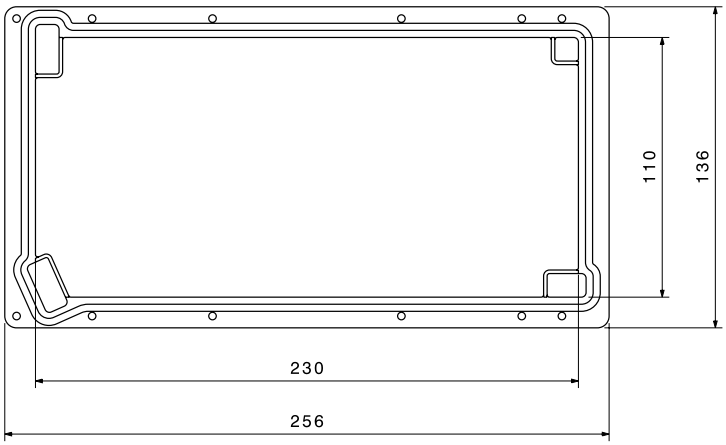

Design grille made of plastic
The grille is mounted on the connection housing AG-60 or AG-90. There are four grille designs (Pazifik, Adria, Atlantik, Karibik). The outside dimensions are identical for all grilles. The wall/ceiling plaster must not exceed 30 mm.

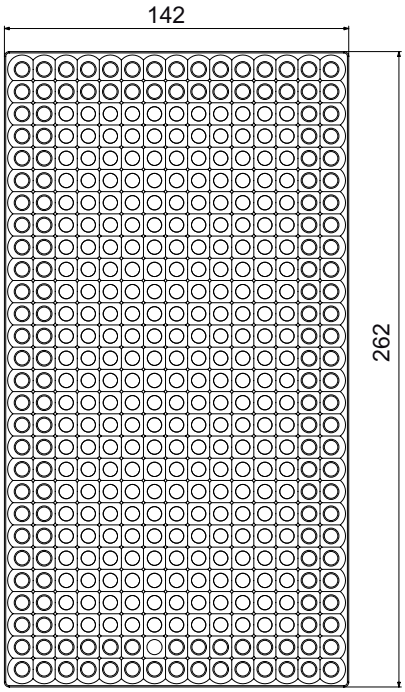

Design grille made of metal
The grille is mounted on the connection housing AG-60 or AG-90. There are three grille designs (Alvier, Säntis, Pizol). The outside dimensions are identical for all grilles. The wall/ceiling plaster must not exceed 30 mm.

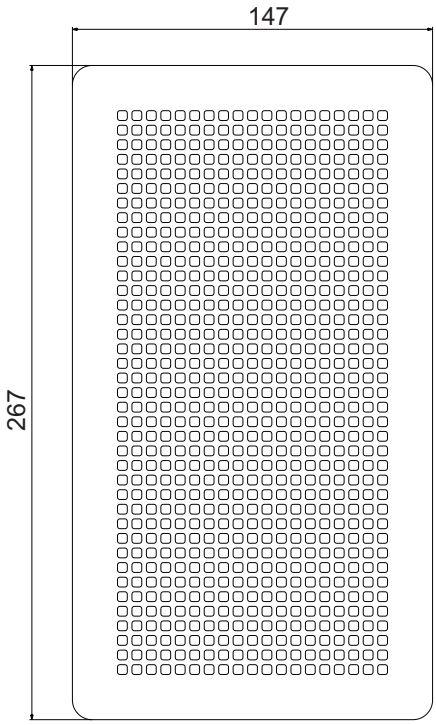

Tangential casing TG-30
For supply air or extract air in combination with the tangential design grille.
Suitable for installation in mass concrete, masonry walls or lightweight construction.
Of plastic with 1 connection nozzle DN 75 incl. fixing angles, building protection cover.
Supply air up to 30 m³/h
Extract air up to 30 m³/h

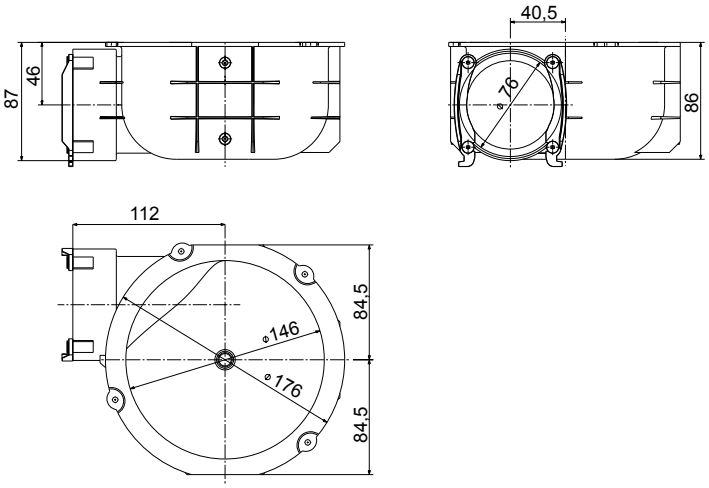

Tangential extension TGA
For the connection of the tangential design grille with the tangential casing TG-30. A connection extension which is required for lightweight walls or filigree concrete.

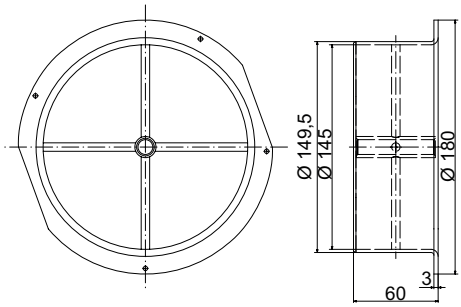

Extract air filter ATG-30
for tangential casing TG-30 and tangential extension TGA
of cleanable, fine-mesh polyamide net with plastic frame.

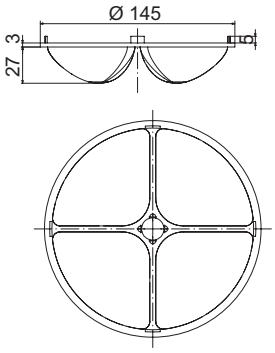

Tangential design grille
Of high quality ABS plastic,
colour white.
Suitable for:
Supply air up to 30 m³/h
Extract air up to 30 m³/h
Plug connection for tangential casing TG-30
The design grille is washable and can be painted on site.

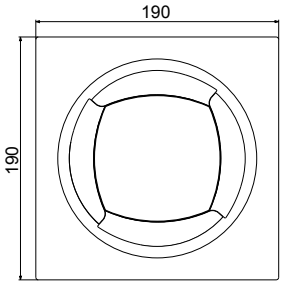

Tangential design grille TR-30
of high-quality ABS plastic,
colour white.
Suitable for:
Supply air up to 30 m³/h
Extract air up to 30 m³/h
Plug connection for
tangential casing TG-30
The design grille is washable and can be painted on site.

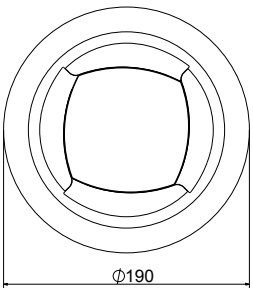

Connection cylinder quick 75 short
For supply and extract air
for masonry, lightweight
and wood construction
Plastic casing, two connections DN 75
incl. 1 stopper DN 75

Supply air:
1 x DN 75 up to 30 m³/h
2 x DN 75 up to 40 m³/h
With tangential outlet only 1 x DN 75

Extract air:
1 x DN 75 up to 30m³/h
2 x DN 75 up to 60m³/h

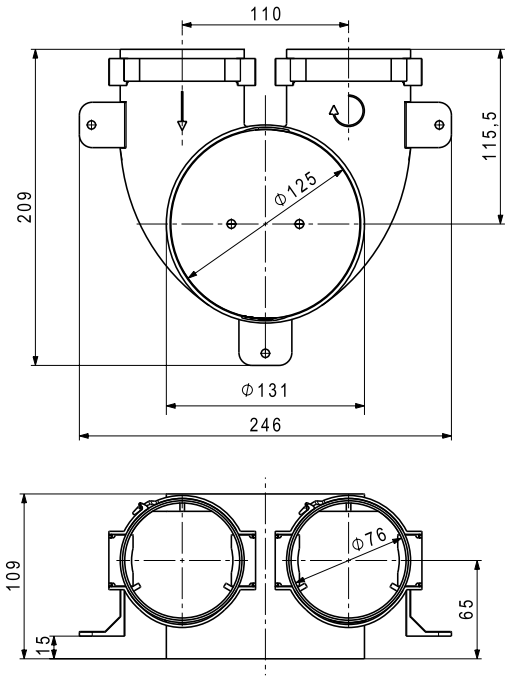

Connection cylinder quick 75 medium
For supply and extract air
for masonry, lightweight
and wood construction
Plastic casing, two connections DN 75
incl. 1 stopper DN 75 and building protection
cover

Supply air:
1 x DN 75 up to 30 m³/h
2 x DN 75 up to 40 m³/h
With tangential outlet only 1 x DN 75

Extract air:
1 x DN 75 up to 30m³/h
2 x DN 75 up to 60m³/h

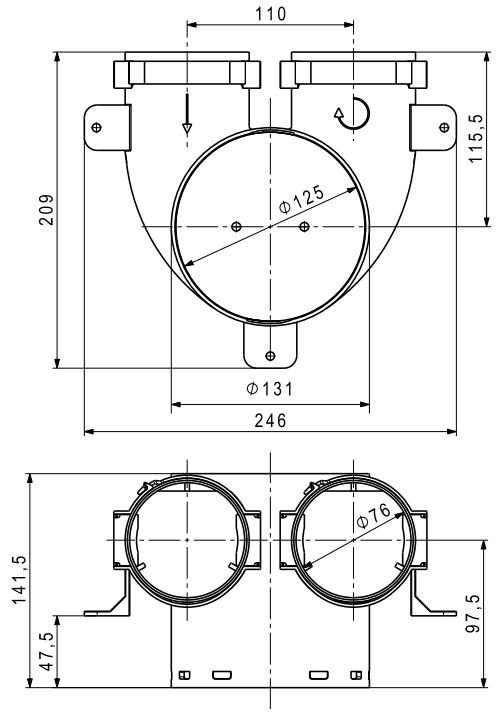

Connection cylinder quick 90 short
for masonry, lightweight
and wood construction
Plastic casing, with connection DN90

Supply air:
1 x DN 90 up to 40m³/h

Extract air:
1 x DN 90 up to 60m³/h

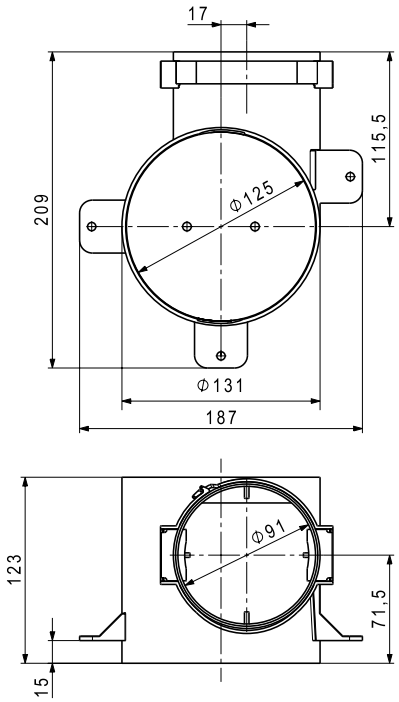

Connection cylinder quick 90 medium
for element ceiling up to 60 mm,
solid concrete
Plastic casing, with connection DN90
incl. building protection cover

Supply air:
1 x DN 90 up to 40m³/h

Extract air:
1 x DN 90 up to 60m³/h

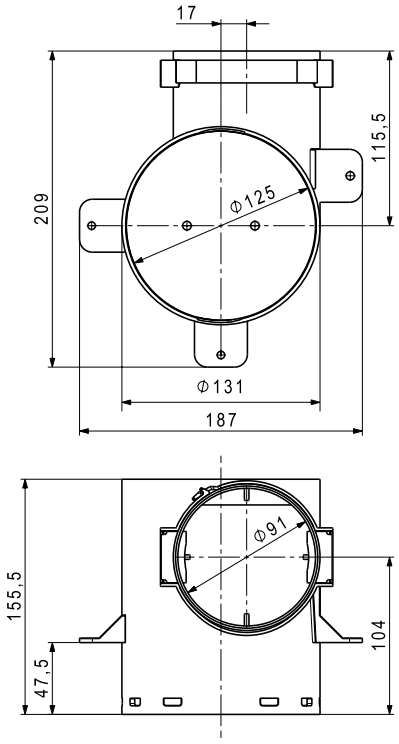

Design grille Tangential 125
suitable for:
Connection cylinder quick 75 + quick 90
made of plastic, with support for
connection cylinder quick 75 + quick 90
Colour: RAL 9016, can be painted on site
Supply air up to 30 m³/h
Extract air up to 30 m³/h

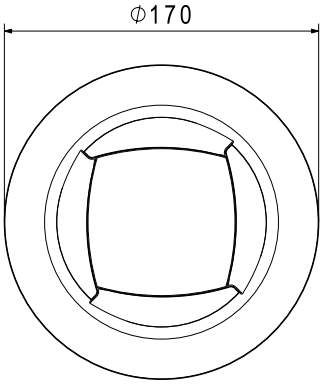

Stainless steel design grille Falknis
suitable for:
Connection cylinder quick 75 + quick 90
Brushed stainless steel
With support for
connection cylinder quick 75 + quick 90
Supply air up to 30 m³/h
Extract air up to 30 m³/h

Design grille Falknis painted white
suitable for:
Connection cylinder quick 75 + quick 90
Steel, painted white (RAL 9016)
With support for
connection cylinder quick 75 + quick 90
Supply air up to 30 m³/h
Extract air up to 30 m³/h

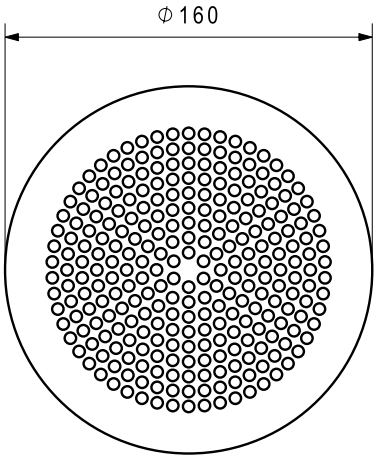

Stainless steel design grille Calanda
suitable for:
Connection cylinder quick 75 + quick 90
Brushed stainless steel
With support for
connection cylinder quick 75 + quick 90
Supply air up to 30 m³/h
Extract air up to 30 m³/h

Design grille Calanda painted white
suitable for:
Connection cylinder quick 75 + quick 90
Steel, painted white (RAL 9016)
With support for
connection cylinder quick 75 + quick 90
Supply air up to 30 m³/h
Extract air up to 30 m³/h

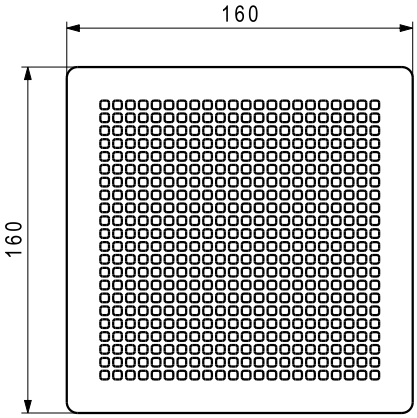

Slit grille SD-75 and SD-90
The slit grille is used for linear supply air distribution. It can be set to one or two outlet sides when taken into service, as required (preset to two sides).
The scope of delivery includes the elegant slit grille of anodised aluminium and the connection box of galvanised steel. The volume flow is set in the distribution case.

Slit grille SD-75

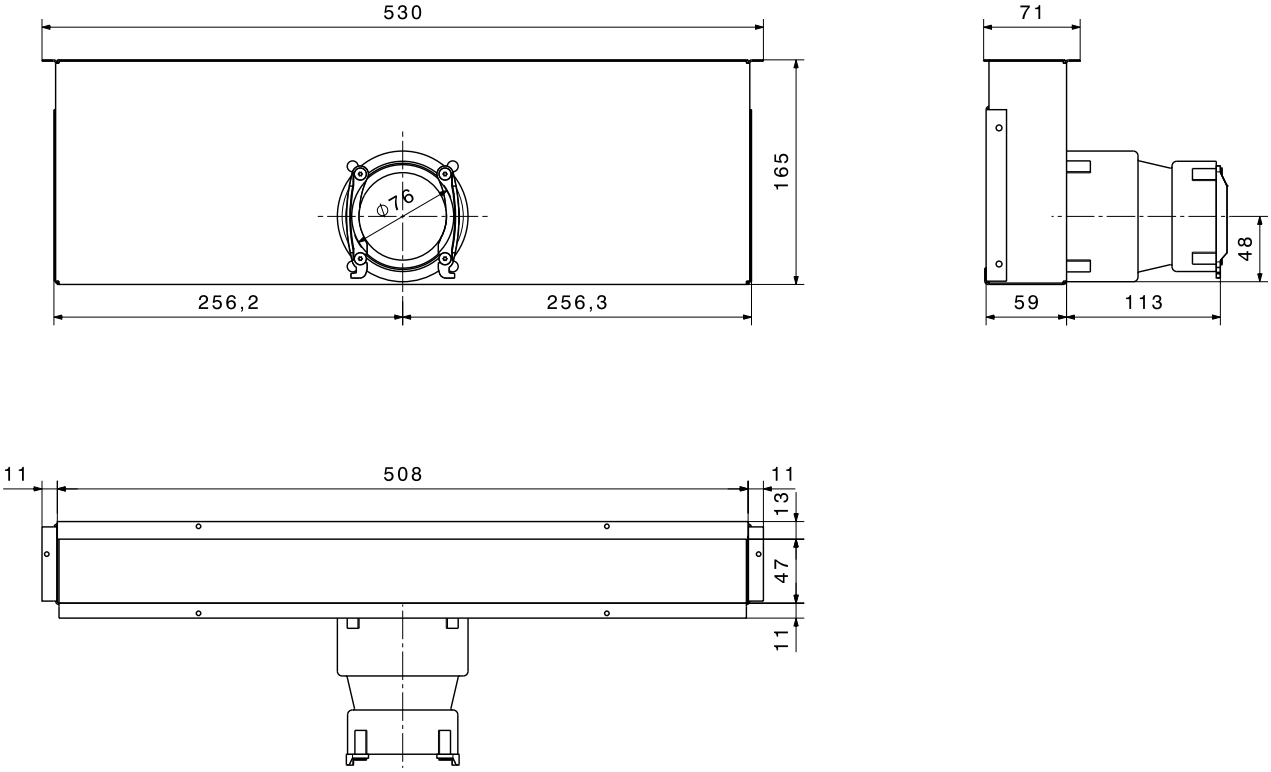

Slit grille SD-90

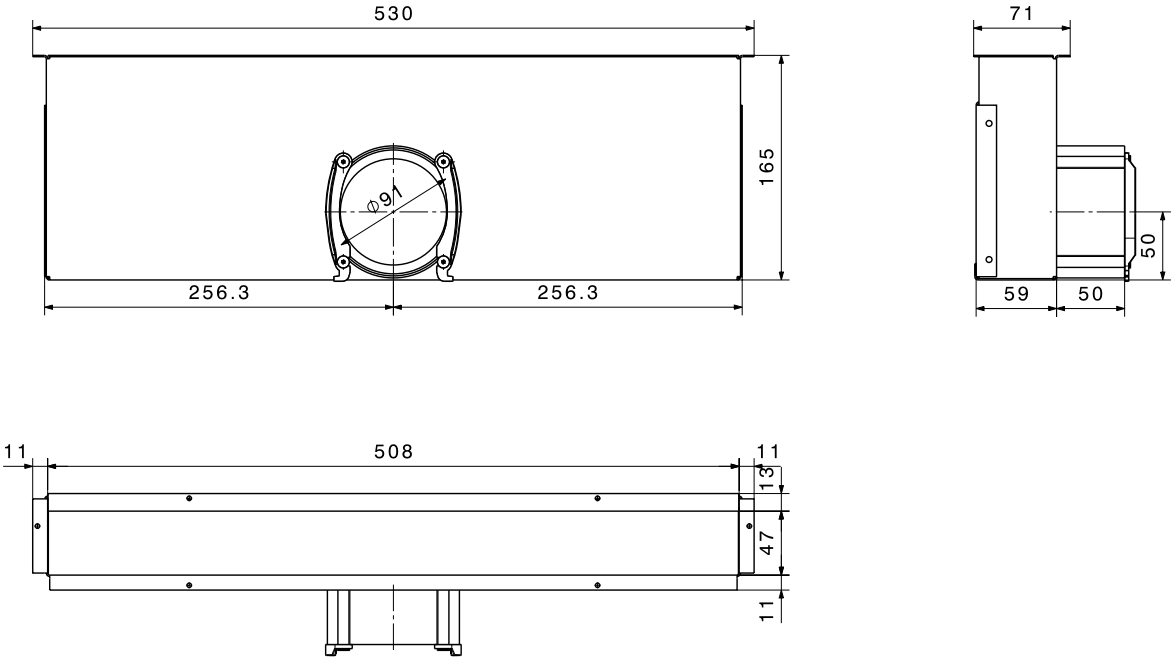

Relevant standards and regulations (incomplete)

- DIN 1946-T6: Controlled mechanical supply and extract air handling for apartments with heat recovery
- DIN 4109: Sound insulation in structural engineering
- DIN EN 779:2012 Particulate air filters for general ventilation – determination of the filtration performance
- DIN 18017-T3: Ventilation of bathrooms and WCs without outside windows
- Energy Conservation Ordinance EnEV
- Ventilation System Guideline LüAR

General

The following information is required for planning the comfort ventilation:

- Type, number, surface area and utilisation of the rooms included in the ventilation
- Floor plans and clear room heights
- Possible locations for routing distribution lines and outlets (ceiling, floor structure, outside wall, etc.)

One comfort ventilation device is only allowed to be used for one utilisation unit. The application limits must be complied with.

Fire protection requirements must be clarified with the responsible specialist. Normally (model building code), there are no special fire protection requirements within usage units with max. 2 dwelling units comprising in total less than 400 m² surface area and less than 7 m height. Living area ventilation units do not replace the drying out of the building. This should be completed by the time the living area ventilation is taken into operation.

Terms

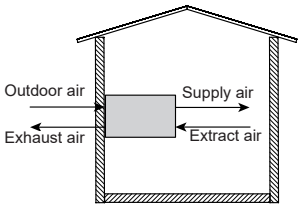

Depending on the use to which they are put, rooms are divided into supply air, overflow and extract air areas (table 1). Rooms are only equipped with both supply and extract air ports in exceptional cases. Rooms equipped with comfort ventilation must be located within the thermal (insulated) building shell.

Table 1

Zone	Room use (examples)
Supply air zone	Bedroom, living room, nursery, dining room
Overflow zone	Corridor, hallway, stairway
Extract air zone	Bathroom, toilet, storage room, kitchen, hall

Flow rates

Necessary volume flows must be defined for a specific project on the basis of the current status of the relevant standards. Special requirements, e.g. concerning noise, moisture loads and temperatures must be taken into account. The following design recommendations are based on DIN 1946 part 6, although compliance with this standard must be examined on a case-by-case basis.
The largest of the volume flows described in the following 4 points is used as the basis for the nominal ventilation of the ventilation unit (e.g. total of all extract air volume flows).
The maximum air flow rate of the ventilation unit should be sufficient for intensive ventilation (1.3 x nominal ventilation at 170 Pa, for example).

1. A volume flow of 30 m³/h must be provided per person for the residential unit.
2. The area-related minimum volume flows in Table 2 must be complied with.
3. The volume flows in Table 3 must be guaranteed for extract air rooms.
4. The volume flows in Table 4 are recommended for supply air rooms.

Table 2

Relevant surface A_{NE} [m²]	**20**	**30**	**50**	**70**	**90**	**110**	**130**	**150**	**170**	**190**	**210**
Nominal ventilation $V_{R,NL}$ [m³/h]	35	45	65	80	100	115	125	140	150	155	165

Table 3: extract air

Room type	Extract air [m³/h]	n *
Kitchen, kitchenette	40	2
Bathroom, toilet with shower	40	2
Toilet	20	1
Utility room, hobby room	20	1

* n = usual number of flexible pipes

Table 4: supply air

Room type	Extract air [m³/h]	n *
Living room	40-50	2
Master bedroom (2 persons)	40	2
Nursery (1 person)	24	1
Office (private), dining room, guestroom	20	1

* n = usual number of flexible pipes

Supply / extract air

Only directly or indirectly heated rooms are included in the ventilation. All supply and extract lines should be routed within the insulated building envelope.
The position of the supply air, overflow air and extract air openings must be selected such that cross-ventilation occurs. Supply air openings must be positioned outside the occupied area, and in particular not above the head ends of beds, writing desks or couches.
Hoval normally uses round flexible pipes DN75 or flat channels 100 as distribution lines. For noise and efficiency reasons, they should be 6 and 15 m long. The external pressure drops (outside + supply air or extract + exhaust air incl. distributor and silencer) should not be more than approx. 100 Pa for nominal ventilation. Hoval recommends complying with a maximum pressure drop of 40 Pa for the lines after the distributor (room-side). Volume flows in excess of 27 m³/h rated ventilation must therefore be distributed between 2 lines. In long line runs, it is necessary to carry out a corresponding calculation.
Distributors must be accessible for inserting the throttle orifices and for cleaning.
Lines between the ventilation unit and the supply air distributor or extract air manifold are normally routed with the diameter of the unit coupling. In cool rooms, they must be insulated.

Fresh / exhaust air

The fresh air inlet should be planned in such a way as to avoid the intake of pollutants and smells. It should be at least 2 m above ground and not close to garages or roads with heavy traffic.
The exhaust air outlet should be positioned in such a way that it cannot be drawn in by the outside air inlet. The horizontal distance should be at least 2 m (note the predominant wind direction).
The fresh and exhaust air lines must be insulated over their complete surface and be impervious to vapour diffusion so as to avoid condensation forming on surfaces (e.g. 25 mm EPDM). The insulation must be continued through the outer wall at least until shortly below the outside surface.

Silencers

Silencers suitable for the noise emissions of the ventilation units must always be positioned in the supply and extract air lines.
To avoid disturbance of neighbours or on your own patio, for example, it is recommended that silencers should be installed in the exhaust air and possibly also outside air lines.

Unit installation

The FR comfort ventilation units can be mounted in various different installation positions. (mounting on a wall / ceiling / floor, outside air top / bottom). The access panel is present on both sides for installation in opposite direction. The FRT comfort ventilation units are always installed with the nozzles directed upwards. Vibration dampers (accessories) must be used for mounting in order to avoid noise transmission and to prevent distortion of the unit. The entire comfort ventilation unit as well as its integrated and add-on parts must be accessible for maintenance and servicing work.

The installation conditions in the technical data (temperature, humidity) must be complied with.

Operator terminal / wiring

The comfort air ventilation unit is configured ready-to-connect. For connection with the mains supply a 3 m long cable with plug is supplied. A 230 V mains socket should be provided close to the comfort ventilation unit in the electrical planning. The operator terminal should be installed so that it is visible (fault display, operation).

The comfort ventilation unit and operator terminal are connected by an 8-pol CAT 5 patch ribbon cable. A socket (RJ45) must be installed in the building close to the comfort ventilation unit and connected to the position of the operator terminal (RJ45 plug). The HomeVent® comfort ventilation unit is supplied with a 3 m long cable with an RJ45 plug for connecting the unit to the socket.

Combination with heating sources

When using ventilation systems together with heating sources, the chimney sweep must be consulted in advance.

Systems extracting air (e.g. cooker hood, ventilation system, central vacuum cleaner, extract air dryer) can give rise to negative pressures and cause hazardous flue gases to be drawn out of the heat source; as a result, a pressure monitor with design certification is generally required as a safety device. This interrupts the electrical power supply to the air extraction system if dangerous pressure conditions arise. The use of approved fire sources independent from the room air can prevent the flue gas being sucked out.

Services

Hoval will be happy to assist you in planning and taking the systems into operation.

IsiPipe and IsiPipe Plus air ducts made of EPP

- The IsiPipe EPP air ducts are joined via a connecting sleeve.
- To ensure tight sealing, the individual sections must be inserted into the sleeve as far as the stop. Tight sealing must be ensured even when individual sections expand or contract as a result of temperature fluctuations.
- The individual sections can be shortened (e.g. using a knife or a saw). When shortening sections, always cut at right angles and remove any residue from the pipe. Use an assembly device, e.g. pipe clamp.
- IsiPipe air ducts made of EPP must be accessible (must not be routed in the cable duct).
- IsiPipe air ducts made of EPP must be supported at regular intervals (approx. every 1.5 m) with pipe clamps.
- When installing accessory parts with a high dead weight, the weight must be supported so that there is no load on the IsiPipe air duct.
- Thermal bridges must be prevented at the junctions between IsiPipe air ducts and pipes or components made of another material, e.g. metal.

1. General

1.1 The following Terms and Conditions shall apply to all our present and future contracts for deliveries and other services (even if the said Terms and Conditions are not specifically mentioned in verbal, telephonic or fax communications).

1.2 All deviations from the present Terms and Conditions, ancillary verbal agreements and subsequent contractual amendments shall only be valid if they have been confirmed by us in writing.

1.3 Buying terms and conditions of the client shall not be valid even if they are not specifically rejected by us. Our Standard Terms and Conditions of Delivery shall be regarded as accepted at the latest upon receipt of our goods and services by the client.

1.4 If a provision of the present Terms and Conditions of Delivery proves to be wholly or partially invalid, the contracting parties shall replace the aforesaid provision by a new provision which comes as close as possible to the legal and economic intention of the invalid provision.

2. Offers

2.1 Our offers shall be subject to change without notice.

2.2 Orders shall only be regarded as accepted when they have been confirmed by us in writing.

2.3 Illustrations, drawings and all technical details in catalogues and printed material shall be approximate values as customary within the industry. They shall only be binding if specific reference is made to them in the contract. We shall also reserve the right to make technical and design changes after the conclusion of the contract.

2.4 Cost estimates, drawings and other documents shall remain our property and shall be subject to copyright protection; they may not be made available to third parties.

3. Regulations in the country of destination

3.1 At the latest at the time of the order, the buyer shall draw our attention to the regulations and standards in force in the country of destination relating to the design of the delivered goods and the operation thereof and also to the execution of services.

3.2 Our deliveries and services shall comply with the regulations and standards in the country of destination provided the buyer has drawn our attention thereto in accordance with Section 3.1.

3.3 The buyer shall duly inform us of any special application features of goods ordered from us if these differ from our general recommendations.

4. Prices

4.1 Our prices shall be ex works, net, excluding packaging.

4.2 All ancillary costs, e.g. freight, insurance, export, transit, import and other approvals, licenses and authentications, shall be for the account of the buyer. The buyer shall also bear all taxes, charges, customs duty, etc., which are levied in connection with the contract.

4.3 We shall reserve the right to make price adjustments if wage rates or material prices change between the date of the order confirmation and the contractual performance of the contract. Price increases shall normally be notified three months in advance. We shall be bound to the price stated in the order confirmation for a period of three months after the effective date of the price increase.

5. Payment terms

5.1 Unless otherwise agreed in writing, our invoices shall be payable within thirty days with no cash discount. Payment shall be deemed to have been made when the amount in question is at our unrestricted disposal on our account in Swiss Franks.

5.2 Payment dates shall be observed even if any delays whatsoever occur after shipment of the goods from our works. The buyer shall not be permitted to reduce or withhold payments on account of complaints or counterclaims not recognised by us.

5.3 Payments shall also be made if insignificant components are missing but usage of the delivered goods is not rendered impossible as a result or if rectification work has to be carried out on the delivery. We shall be entitled to reject rectification of the defect as long as the buyer has not discharged his/its obligations to us.

5.4 If the buyer fails to comply with the agreed payment dates, default interest shall be paid from the agreed due date without a reminder being issued; the aforesaid interest shall be based on the interest rates prevailing at the domicile of the buyer, but shall be not less than four percent above the current discount rate of the Swiss Central Bank.

5.5 We shall be entitled to make deliveries of pending orders dependent upon settlement of outstanding claims.

6. Reservation of title

6.1 Delivered goods shall remain our property (reserved goods) pending full and complete payment of all present and future claims to which we are entitled regardless of their legal cause. This shall also apply if payments are made in settlement of specifically designated claims.

6.2 The buyer shall be entitled to process and sell reserved goods in the ordinary course of business.

6.3 If our reserved goods are combined or intermingled with other goods, the buyer shall hereby transfer his/its ownership rights in the new goods or chattels to us upon the conclusion of the contract in the amount of the invoice value of the reserved goods.

6.4 If the goods are resold by the buyer, he/it shall hereby transfer to us upon the conclusion of the contract with us his/its claims arising from the aforesaid resale in the amount of the invoice value of the reserved goods.

6.5 If the reserved goods are used by the buyer to perform a works or works delivery contract, his/its claim from the aforesaid works or works delivery contract shall hereby be assigned to us in the same amount and on the same date as for the purchase price claim (Section 6.4).

6.6 As long as he/it is honouring his/its payment obligations, the buyer shall, however, be authorised to collect his/its resale claim which has been assigned to us. He/it may not dispose of such claims by way of assignment to third parties, however. The empowerment of the buyer to collect the claim may be revoked by us at any time. We shall be entitled to notify third party debtors of the assignment. The buyer shall be entitled to provide us with the necessary information and documents in order to enable us to enforce our rights.

6.7 If the value of our securities exceeds our total claims by more than 10 %, we shall be obliged to release securities of our choice at the request of the buyer.

6.8 The buyer shall inform us immediately of any pledge or other impediment to our property enforced by third parties.

6.9 The buyer shall be obliged to collaborate in measures required to protect our title. He/it shall, in particular, empower us upon the conclusion of the contract to make entries or prior notice of the reservation of title at his/its cost in public registers, books and documents, etc., in accordance with the relevant national laws and shall perform all formalities in this respect.

6.10 The buyer shall maintain the reserved goods at his/its cost for the duration of the reservation of title and shall insure the said goods against theft, breakage, fire, water and other risks in our favour. He/it shall also take all steps to ensure that our property claims are neither adversely affected nor rescinded.

7. Delivery periods

7.1 Delivery periods and deadlines stated by us shall be approximate unless we have given an express written confirmation of a deadline as binding.

7.2 Delivery periods shall be deemed to have been met if notification of readiness to deliver has been sent to the buyer before the end of the delivery period.

7.3 The delivery period shall be prolonged if details required for the performance of the contract are not received on time or if they are subsequently changed by the buyer.

7.4 The delivery period shall also be reasonably prolonged if impediments arise which we cannot avert despite exercise of the necessary care (e.g. major operational disruptions, industrial disputes, delayed or defective deliveries, force majeure, etc.).

7.5 If an agreed delivery date is met by more than 14 days, the buyer shall be obliged to set us a reasonable period of grace. The buyer may only withdraw from the contract if our goods have not been delivered by the end of the said period of grace. Compensation claims for non-performance, delayed performance or any consequential losses shall be excluded unless there was gross negligence on our part.

8. Transfer of risk

8.1 Unless expressly agreed otherwise in writing, our “ex works” deliveries shall be made in accordance with the international rules on the interpretation of commercial clauses of the International Chamber of Commerce (Incoterms) in the version in force on the date of the order confirmation.

8.2 The transfer of risk shall be determined by the aforesaid Incoterms.

8.3 Insurance against damages of any kind shall be the responsibility of the buyer.

8.4 Complaints in connection with the transport shall be immediately notified by the buyer to the last carrier upon receipt of the delivery.
8.5 If despatch is delayed at the request of the buyer or for any other reasons not attributable to us, the risk shall pass to the buyer on the original date envisaged for the "ex works" delivery. We shall be entitled to demand payment from this date onwards.

9. Delivery inspection

9.1 The buyer shall be required to inspect deliveries immediately. If the goods do not comply with the order or the delivery note or if visible defects are identified, he/it shall be obliged to notify the aforesaid to us in writing within eight days of receipt. Later complaints shall not be recognised. (Re transport damages, cf. Section 8.4)

10. Assembly and operations

10.1 The assembly, putting into operation, operation and maintenance of the delivered goods shall be carried out in accordance with our guidelines. They may be executed by our staff or by appropriately trained third parties as agreed with the buyer.
10.2 If we require a commissioning certificate for certain product groups, warranty claims for the proper functioning of the equipment can only be enforced if a proper hand-over has been documented by a confirmed commissioning certificate received by us within one month of the hand-over.

11. Warranty

11.1 Warranty period
11.1.1 The general warranty period shall be 12 months from the first commissioning but no longer than 18 months from the date on which the relevant goods left our works.
If despatch is delayed for reasons not attributable to us, the warranty shall lapse no later than 18 months after notification of the readiness to deliver.
The general warranty period shall exclude electrical components for which the warranty period shall be 6 months from the first commissioning but no later than 12 months from the date of shipment from our works.
11.1.2 We refer to Section 11.6.1 with regard to the warranty period for third party products.
11.1.3 The warranty period for components which we have repaired during the warranty period or have delivered as replacement shall be 12 months from the completion of our repair or from the date of the replacement delivery but no longer than the end of a period equivalent to twice the original warranty period as per Section 11.1.1.
11.2 Liability for material, design and workmanship defects
11.2.1 The contractual condition of the goods shall be based on the condition upon the transfer of risk.
11.2.2 Defects shall be notified to us immediately in writing.
11.2.3 We shall be liable for all components which can be shown to have become defective or unusable before the end of the warranty period as a result of defective materials, defective design or defective workmanship, with such components being repaired or replaced ex works immediately at our choice.
11.3 Liability for warranted qualities
11.3.1 Warranted qualities shall only be those which are specifically designated as such in the order confirmation or in the relevant specifications.
11.3.2 The aforesaid assurance shall apply at the latest until the end of the warranty period. If a taking-over test has been agreed with the buyer, the assurance shall be deemed as performed if proof of the relevant qualities is furnished during the aforesaid test.
11.3.3 If the warranted qualities are not performed or only partially performed, the buyer shall be entitled to an immediate rectification. The buyer shall grant us the necessary time and opportunity for this purpose.
11.3.4 If the rectification is abortive or only partially successful, the buyer shall be entitled to a reasonable reduction of the purchase price. If the defect is so serious that it cannot be rectified within a reasonable period of time, and if deliveries or services for the notified purpose are not usable or are only usable to a much lesser extent, the buyer shall be entitled to refuse acceptance of the defective component or to withdraw from the contract if part-acceptance is economically unreasonable. We shall only be obliged to refund amounts which have been paid to us for the components affected by the aforesaid withdrawal.
11.4 Exclusion of liability for defects
11.4.1 Our liability shall exclude damages which cannot be proved to have been sustained as a result of defective material, defective design or defective workmanship.
11.4.2 Damages shall therefore be excluded for example which were caused by
- improper work of other persons with regard to planning, site preparation, assembly, operation and maintenance;
- plant concepts and designs which do not comply with the latest state of the art;
- non-observance of our guidelines for planning, assembly, commissioning, operations and maintenance;
- force majeure (e.g. thunderstorms).

11.4.3 The following shall be excluded in particular
- corrosion damages (e.g. as a result of aggressive water, unsuitable water treatment, oxygen intakes, emptying the plant over a longer period of time, falling below the dew point, chemical or electrochemical effects, etc.);
- damages caused by air pollution (e.g. the accumulation of intense dust, aggressive vapours, etc.);
- damages caused by unsuitable equipment and fuels;
- damages caused by overcharging, excessive water pressure, scaling, improper electrical connections and inadequate fuse protection.

11.4.4 Components shall also be excluded from the warranty which are subject to natural wear and tear (e.g. burner nozzles, combustion chamber inserts, ignition and monitoring components in contact with fire, fireclay and wall facings, fuses, seals and flexible tubes).
11.5 Commissioning certificate
11.5.1 We hereby draw attention to the due and proper hand-over and - if envisaged - the commissioning certificate in accordance with Section 10.2 as prerequisites for our warranty.
11.6 Deliveries and services of sub-contractors
11.6.1 Our liability for third party products which form a major part of the delivered goods (e.g. warehouse and conveying equipment, burners, measuring and control equipment, electrical components, flue gas and waste water cleaning equipment) shall - if permissible - be limited to an assignment of our claims against the suppliers of the said third party products.

12. Exclusion of further liability

12.1 The buyer shall have no rights and claims for materials, design and workmanship defects or the lack of warranted qualities unless specifically mentioned in Sections 11.1 to 11.6.
12.2 All claims for compensation, reduction in the contract price, rescission of the contract or withdrawal from the contract shall be excluded in particular unless these are specifically mentioned. Under no circumstances shall the buyer have any compensation claim for damages which were not sustained by the delivered goods themselves (e.g. replacement costs, cost for establishing the cause of the damage, expertises, production stoppages, production losses, lost orders, lost profit and other direct or indirect damages). The aforesaid liability exclusion shall not apply in the event of gross negligence on our part.
12.3 The exclusion as per Section 12.2 shall apply for all breaches of contract and all claims of the buyer regardless of why they were lodged from a legal point of view. It shall therefore also apply for a breach of any ancillary obligations (e.g. inadequate advice, etc.).

13. Jurisdiction

13.1 **The place of jurisdiction for the buyer and for us shall be Vaduz.** We shall be entitled to bring action against the buyer at his/its domicile, however.
13.2 The legal relationship between the parties shall be governed by the substantive laws of Switzerland. The application of the UN convention on contracts for the international sale of goods (CISG) shall be excluded.

Hoval

Responsibility for energy and environment.

The Hoval brand is internationally known as one of the leading suppliers of indoor climate control solutions. More than 66 years of experience have given us the necessary capabilities and motivation to continuously develop exceptional solutions and technically advanced equipment. Maximising energy efficiency and thus protecting the environment are both our commitment and our incentive. Hoval has established itself as an expert provider of intelligent heating and ventilation systems that are exported to over
50 countries worldwide.

Hoval Aktiengesellschaft
Austrasse 70
FL-9490 Vaduz
Principality of Liechtenstein
(Swiss customs territory)
Phone +423 3992 400
Fax +423 3992 618
E-Mail info@hoval.com
www.hoval.com

Hoval heating technology

As an energy-neutral supplier with a full range of products, Hoval helps its customers to select innovative system solutions for a wide range of energy sources, such as heat pumps, biomass, solar energy, gas, oil and district heating. Services range from private residential units to large-scale industrial projects.

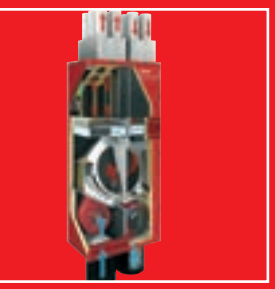

Hoval residential ventilation

Increased comfort and more efficient use of energy from private housing to industrial halls: our controlled residential ventilation products provide fresh, clean air for living and working space. Our innovative system for a healthy room climate uses heat and moisture recovery, while at the same time protecting energy resources and providing a healthier environment.

Hoval indoor climate systems

Supplying fresh air, removing extract air, heating, cooling, filtering and distributing air, utilising heat gains or recovering cold energy – no matter what the task, Hoval indoor climate systems provide tailor-made solutions with low planning and installation costs.

2019

PEFC